AS85049/126
90° Strain Relief
Self-Locking or Non-Self-Locking

CONNECTOR DESIGNATOR:	
H	MIL-DTL-38999 Series III & IV EN3645

Product Series and Basic Part Number	Dash No. *Table I Page 62-34*		Finish *Table II Page 62-34*
M85049/126	S	09	W

S = Detented Self-Locking
N = Non-Detented Self-Locking
Use Dash (–) for Non-Self-Locking
(See Note 5)

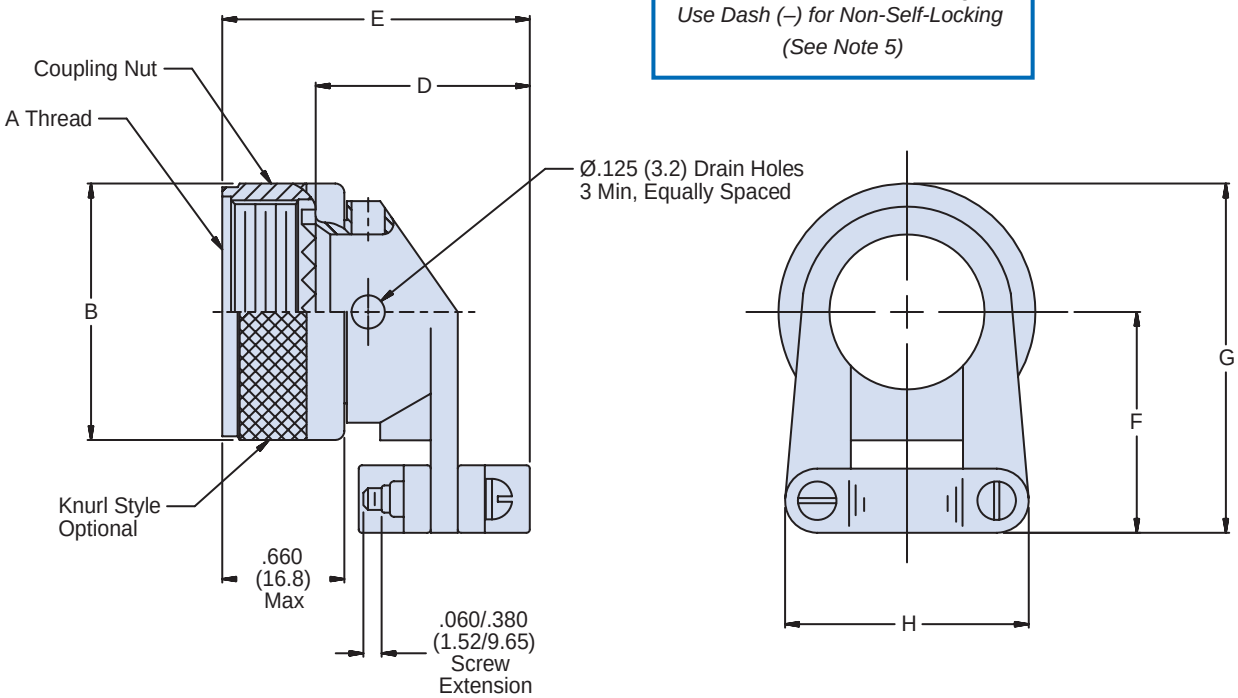

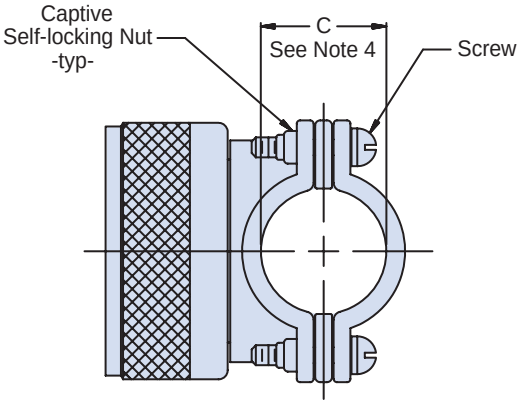

Dimensions in inches (millimeters) and are subject to change without notice.

© 2013 Glenair, Inc. U.S. CAGE Code 06324 Printed in U.S.A.

AS85049/126
90° Strain Relief
Self-Locking or Non-Self-Locking

TABLE I: Dash Number, Shell Size, Thread and Dimensions

Dash No.	Screw Size	Shell Size Code (Ref)	A Thread ISO Metric	B Dia Max	C Dim ± .031 (0.79) See Note 4	D Max	E Max Length	F Max	G Max	H Max
09	4-40	A	M12 x 1 - 6H	.858 (21.8)	.219 (5.6)	.86 (21.8)	1.14 (29.0)	.81 (20.6)	1.24 (31.5)	.88 (22.4)
11	4-40	B	M15 x 1 - 6H	.984 (25.0)	.264 (6.7)	.94 (23.9)	1.22 (31.0)	.87 (22.1)	1.36 (34.5)	.94 (23.9)
13	4-40	C	M18 x 1 - 6H	1.157 (29.4)	.344 (8.7)	1.14 (29.0)	1.42 (36.1)	.93 (23.6)	1.51 (38.4)	1.12 (28.4)
15	4-40	D	M22 x 1 - 6H	1.297 (32.5)	.460 (11.7)	1.20 (30.5)	1.48 (37.6)	.99 (25.1)	1.63 (41.4)	1.19 (30.2)
17	4-40	E	M25 x 1 - 6H	1.406 (35.7)	.545 (13.8)	1.34 (34.0)	1.62 (41.1)	1.09 (27.7)	1.76 (44.7)	1.44 (36.6)
19	6-32	F	M28 x 1 - 6H	1.516 (38.5)	.615 (15.6)	1.46 (37.1)	1.74 (44.2)	1.23 (31.2)	1.99 (50.5)	1.56 (39.6)
21	6-32	G	M31 x 1 - 6H	1.642 (41.7)	.698 (17.7)	1.58 (40.1)	1.86 (47.2)	1.30 (33.0)	2.12 (53.8)	1.69 (42.9)
23	6-32	H	M34 x 1 - 6H	1.768 (44.9)	.780 (19.8)	1.71 (43.4)	1.99 (50.5)	1.36 (34.5)	2.24 (56.9)	1.75 (44.5)
25	8-32	J	M37 x 1 - 6H	1.869 (47.5)	.850 (21.6)	1.83 (46.5)	2.11 (53.6)	1.42 (36.1)	2.35 (59.7)	1.88 (47.8)

TABLE II: Material and Finish

Symbol	Material	Finish
A	Aluminum Alloy	Black Anodize
N		Electroless Nickel
W		Cadmium, Olive Drab
X		Nickel Fluorocarbon Polymer
Y		Pure Dense Electrodeposited Aluminum
Z		Zinc Nickel
S	300 Series SST	Passivated

APPLICATION NOTES

1. Assembly to be identified with manufacturer's name and part number, space permitting.
2. Glenair Series 600 Backshell Assembly Tools are recommended for assembly and installation.
3. Metric equivalents in parentheses (mm) are given for general information only and are based on 1.000 inch = 25.4 mm.
4. Cable entry is measured with saddle bars closed and bottomed on clamp ears.
5. Detented self-locking has a positive audible detented coupling.
6. Material/Finish:
   Clamp body, coupling nut, saddles - Al alloy or 300 Series SST/See Table II.
   Clamp screws and lock nuts - CRES/Passivated, Silver plate optional.
   Anti-rotation device - Corrosion resistant material

Dimensions in inches (millimeters) and are subject to change without notice.

© 2013 Glenair, Inc.
U.S. CAGE Code 06324
Printed in U.S.A.