Amphenol® Heavy Duty Cylindrical Connectors

12-052-9

Amphenol

Amphenol® Heavy Duty Cylindrical Connectors
MIL-C-22992/Proprietary

- **High Current Capacity**
- **Rugged Construction**
- **Safety**
- **Serviceability**

Amphenol meets the demands for heavy duty connectors by providing three cylindrical connector series, each with unique design characteristics for reliable operation in specific industrial environments.

Class "L" – for the heaviest electrical loads (Pages 2 – 19)
- Current range from 40 to 200 amperes
- Direct current or single/three phase, 60/400 Hertz alternating current
- Automatic grounding for safety
- MIL-C-22992 qualification

QWLD – for most power and control circuits (Pages 21 – 77)
- Military (MIL-C-22992) qualified connectors and industrial equivalents available
- Increased shell size for greater durability than similar standard connectors

QWL – a more compact heavy duty design for industrial power and control applications (Page 78, references Amphenol Catalog 12-053)

These three series share the following common characteristics which are critical to reliable heavy duty connectors:
- Resistance to the operating environment. Refer to environmental data, below.
- Double stub coupling threads for faster connections; no cross threading, easy cleaning.
- Left hand accessory threads to minimize cable twisting, wire breakage, accidental connector disassembly.
- Gaskets or O-rings at appropriate surfaces for perfect weathertight connections.

Amphenol® heavy duty connectors have been exposed to the following environmental conditions, without compromise of mechanical integrity or degradation of electrical performance.

Condition	Configuration	Description	Reference
Thermal Shock	Unmated	Five complete one hour temperature cycles of –55°C to +125°C	MIL-STD-1344, method 1003, test condition A
Moisture Resistance (Cable mounted connectors)	Mated	Ten complete 24 hour cycles of +25°C to +65°C temperature at 90% to 98% humidity	MIL-STD-202, method 106
Durability	Mated	500 complete mating/unmating cycles	MIL-C-22992
Salt Spray (Corrosion)	Unmated	48 hour exposure to atomized 5% saline solution at +35°C	MIL-STD-1344, method 1001
Vibration	Mated	10 to 55 Hz, .06 inch total excursion in 1 minute cycles for 6 hours, 55 to 2000 Hz, 10G peak amplitude sweep	MIL-STD-1344, method 2005
High Impact	Mated	Nine hammer blows from 1, 3 and 5 feet, three each in three axes on mounting panel	MIL-STD-202, method 207
Heat Rise (Class L only)	Mated	Maximum rated DC current for four hours at +25°C in still air	MIL-C-22992
Fluid Immersion	Unmated	20 hours immersion in hydraulic fluid and lubricating oil	MIL-C-22992
Water Immersion	Mated and Unmated	4 hours immersion at 1 atmosphere pressure differential	MIL-C-22992

Amphenol® Heavy Duty Cylindrical Connectors
MIL-C-22992, Class L

The Amphenol® Class L* heavy duty connectors are the largest size cylindricals, highly suitable for industrial or military applications, and designed to meet the demands of heavy power interconnections.

The design features of this connector series provide:

- **Greatest Capacity -**
  current ranges 40 to 200 amps, conductor sizes 6 to 4/0
- **Safety -**
  complete protection of personnel and equipment if connectors are inadvertently disconnected under load
- **Foolproof Mating -**
  design incorporates specific voltage, current, frequency, phase and grounding requirements
- **Standardization -**
  MIL-C-22992 Class L insert arrangements specify connector/cable combinations for maximum reliability
- **Serviceable Contacts -**
  contacts are normally crimped to the cable before connector assembly. No insertion tools required. Bushings are available to adapt smaller diameter wires to larger contacts

* Amphenol design is covered by one or more of the following U. S. Patent Numbers: 3,023,396; 3,221,292.

Amphenol® Heavy Duty Cylindrical Connectors
MIL-C-22992, Class L

Class L connectors are available only in the specific configurations prescribed by MIL-C-22992 for either military or industrial applications. This rigid configuration control assures correct interconnection of electrical circuits for maximum safety and reliability. Controlled parameters include:

Connector shell style and contact type - wall mount and cable connecting receptacles are supplied with socket contacts only and always lead from the power source. Plugs (with coupling rings) have pin contacts only and always lead to the equipment end.

Shell size - the direct relationship of shell size to current carrying capability reduces the possibility of inadequate wiring for heavy electrical loads.†

Shell Size	Current Rating (Amperes)	Contact Size
28	40	6
32	60	4
44	100	1/0
52	200	4/0

Keyway position - four positions of the main keyway are used to discriminate between the following power sources:

two wire D.C
two wire single phase A.C.
three wire single phase A.C.
four wire three phase A.C.

Insert rotation - when carrying alternating current (A.C), different angular rotations of the insert within the connector shell are used to distinguish between 60 Hertz and 400 Hertz circuits.

Other outstanding design features:

Arc quenching design - recessed socket contacts within the insert create an arc suppressing chamber which protects the user when connectors are separated under load.

Programmed coupling sequence - grounding and neutral contacts engage before power contacts.

Waterproof design - a unique combination of grommets and seals provides waterproofing in any condition - mated or unmated, capped or uncapped.

Rugged construction - machined from high strength aluminum. Straight-line attachment of accessories eliminates possibility of cable twisting or misalignment.

Accessories - supplied with all Class L connectors as indicated on the individual connector descriptions. Replacement accessories may be ordered separately. See pages 12 through 15.

† MIL-C-22992 includes shell size 48, rated at 150 amperes. Consult your local Amphenol sales representative or Amphenol, Sidney, NY for availability.

MIL-C-22992, Class L
how to order

Connectors are supplied with removable contacts unassembled and applicable accessories as listed in the individual connector style descriptions, pages 8 through 11. Additional/replacement contacts or accessories may be ordered by their MS designations.

Connectors are ordered by MS designation. To illustrate the ordering procedure, part number MS90555 C32412SY is shown as follows:

PART NUMBER

MS90555	C	32	4	12	S	Y
1	2	3	4	5	6	7

1. **MS Number -**
   MS90555 designates wall mount receptacle *(power source)*
   MS90556 designates straight plug
   MS90557 designates cable connecting receptacle without coupling ring
   MS90558 designates wall mount plug with coupling ring *(equipment end)*
2. **Shell Finish -** C (conductive) for AC or N (nonconductive) for DC circuits.

Grounding Assemblies: Finish C

Shell Size	Current Rating Amps	Shell Master Key/Keyway Position						
		60Hz & 400Hz						
		1 Phase			3 Phase			
		2 Wire		3 Wire	3 Wire	4 Wire		
		120 VAC	240 VAC	120/240 VAC	450/480 VAC	120/208 VAC	240/416 VAC	277/480 VAC
28	40	4 (120°)	5 (135°)	4 (120°)	---	4 (120°)	5 (135°)	6 (150°)
32	60	4 (120°)	5 (135°)	4 (120°)	---	4 (120°)	5 (135°)	6 (150°)
44	100	4 (120°)	---	4 (120°)	1 (60°)	4 (120°)	5 (135°)	6 (150°)
52	200	---	---	4 (120°)	---	4 (120°)	5 (135°)	6 (150°)

Non-grounding Assemblies: Finish N

Shell Size	Current Rating Amps	Shell Master/Key Keyway Position
		DC
		2 Wire
		28 VDC
28	40	N (105°)
32	60	N (105°)
44	100	N (105°)
52	200	N (105°)

3. **Shell Size -** related directly to current carrying capability.
   Size 28 - 40 amperes
   Size 32 - 60 amperes
   Size 44 - 100 amperes
   Size 52 - 200 amperes
4. **Master Key/Keyway Position -** N designates normal position. Positions 1, 4, 5 and 6 of the master key/keyway prevent cross-mating of incompatible voltages. Refer to the adjacent illustration.
5. **Insert Arrangement -** determined by connector size (current carrying capability) and cable configuration to be accommodated. Refer to pages 5 & 6.
6. **Contact Type -** P for pin, S for socket. MS90555 and MS90557 are supplied with socket contacts **only**. MS90556 and MS90558 are supplied with pin contacts **only**.
7. **Alternate Insert Rotation -** used to prevent cross-mating of incompatible frequencies. Absence of a letter in this space indicates normal (0°) position of the insert. Refer to page 7.

MASTER KEY/KEYWAY POSITION

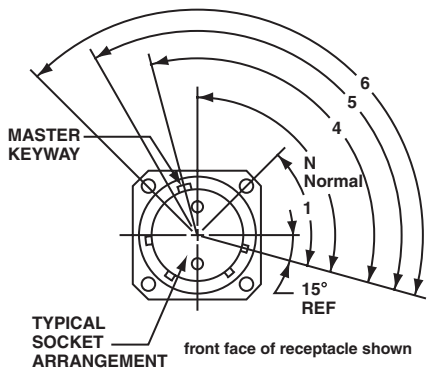

Note that insert arrangement does not rotate with master key/keyway

Amphenol Federal Vendor Identification
FSCM77820

MIL-C-22992, Class L
contact arrangements

Shell Size 28, 40 amp rating

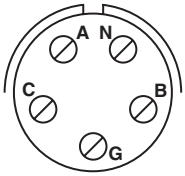

28-12, 28-13
Three phase AC, 4 wire, grounding

Cable:

28-12	IPCEA, type G, round, four #8 conductors
28-13	CO-04 HDF, (4/6-4/12R) 1090 per MIL-C-3432

Contacts:

Position	Size	Pin M39029/48	Socket M39029/49
A, B, C	6	-317	-329
N, G	6N	-318	-329

Shell Size 32, 60 amp rating

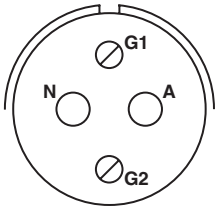

32-04, 32-05
Single phase AC, 2 wire, grounding

Cable:

32-04	IPCEA, type G, round, two #6 conductors
32-05	CO-02 HDF, (2/4-2/8R) 1100 per MIL-C-3432

Contacts:

Position	Size	Pin M39029/48	Socket M39029/49
A	4	-320	-331
N	4N	-321	-331
G1, G2	6N	-318	-329

Shell Size 32, 60 amp rating

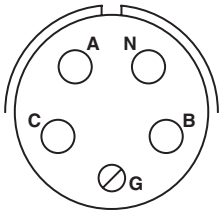

32-12, 32-13
Three phase AC, 4 wire, grounding

Cable:

32-12	IPCEA, type G, round, four #6 conductors
32-13	CO-04 HDF, (4/4-4/12R) 1290 per MIL-C-3432

Contacts:

Position	Size	Pin M39029/48	Socket M39029/49
A, B, C	4	-320	-331
N	4N	-321	-331
G	6N	-318	-329

Shell Size 44, 100 amp rating

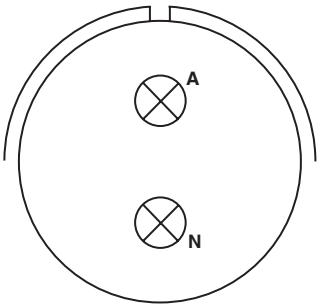

44-02, 44-03
28 Volts DC, 2 wire

Cable:

44-02	IPCEA, type W, round, two #2 conductors
44-03	CO-02 HDF, (2/1) 1385 per MIL-C-3432

Contacts:

Position	Size	Pin M39029/48	Socket M39029/49
A	1/0-1	-323	-333
N	1/0N-1	-324	-333

IPCEA – Insulated Power Cable Engineers Association

CONTACT LEGEND 6 4 1/0 4/0

MIL-C-22992, Class L
contact arrangements

Shell Size 44, 100 amp rating

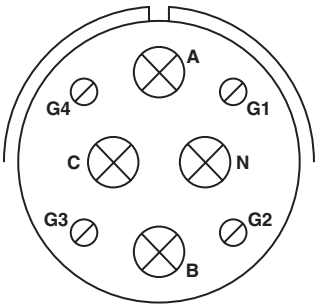

44-12, 44-13
Three phase AC, 4 wire, grounding

Cable:

44-12	IPCEA, type G, round, four #2 conductors
44-13	CO-04 HDF, (4/1-4/8R) 1620 per MIL-C-3432

Contacts:

Position	Size	Pin M39029/48	Socket M39029/49
A, B, C	1/0-1	-323	-333
N	1/0N-1	-324	-333
G1, G2, G3, G4	6G	-319	-330

Shell Size 44, 100 amp rating
For Navy Ground Support Equipment use only.

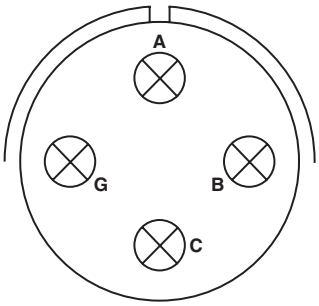

44-50, 44-51, 44-52, 44-56
Three phase AC, 3 wire, grounding

44-50	Available in MS90555 & MS90558 only 4 each # 1 conductors

Cable:

44-51	Available in MS90556 & MS90557 only IPCEA, type W, round, four # 1 conductors
44-52	Available in MS90556 only IPCEA, type W, round, four # 2 conductors
44-56	Available in MS90556 only IPCEA, type W, round, four # 6 conductors

Contacts:

Position	Size	Pin M39029/48	Socket M39029/49
A, B, C	1/0-1	-323	-333
G	1/0N-1	-324	-333

Shell Size 52, 200 amp rating

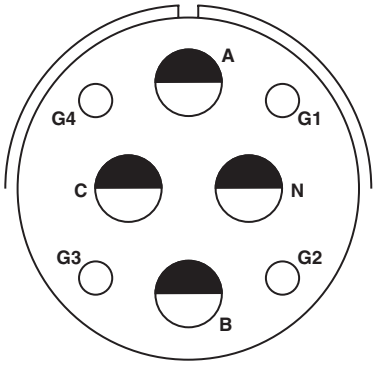

52-12, 52-13
Three phase AC, 4 wire, grounding

Cable:

52-12	IPCEA, type G, round, four #4/0 conductors
52-13	CO-04 HDE, (4/0000-4/4R) 2380 per MIL-C-3432

Contacts:

Position	Size	Pin M39029/48	Socket M39029/49
A, B, C	4/0	-327	-335
N	4/0N	-328	-335
G1, G2, G3, G4	4G	-322	-332

IPCEA – Insulated Power Cable Engineers Association

CONTACT LEGEND 6 4 1/0 4/0

MIL-C-22992, Class L
alternate insert rotations

To avoid cross-plugging problems in applications requiring the use of more than one connector of the same size and arrangement, alternate insert rotations are available as indicated in the accompanying chart.

As shown in the diagram below, the front face of the pin insert is rotated within the shell in a clockwise direction from the normal shell key. The socket insert would be rotated counterclockwise the same number of degrees in respect to the normal shell key.

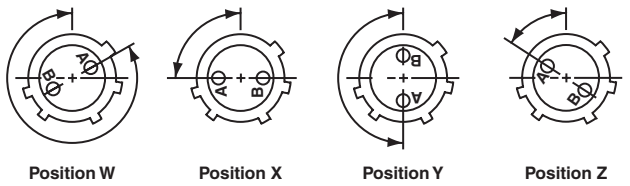

Position W **Position X** **Position Y** **Position Z**

Views looking into front face of pin insert or rear of socket insert.

Insert Arrangements	Keying Position (degrees from normal position)				
	DC or 60 Hz Normal	400 Hz			
		W	X	Y	Z
28-12	0	–	–	180	–
28-13	0	–	–	180	–
32-04	0	–	90	–	–
32-05	0	–	90	–	–
32-12	0	–	–	180	–
32-13	0	–	–	180	–
44-12	0	–	–	–	60
44-13	0	–	–	–	60
44-50	0	–	–	–	–
44-51	0	–	–	–	–
44-52	0	–	–	–	–
44-56	0	–	–	–	–
52-12	0	300	–	–	–
52-13	0	300	–	–	–

MIL-C-22992, Class L
MS90555
wall mount receptacle *(power source)*

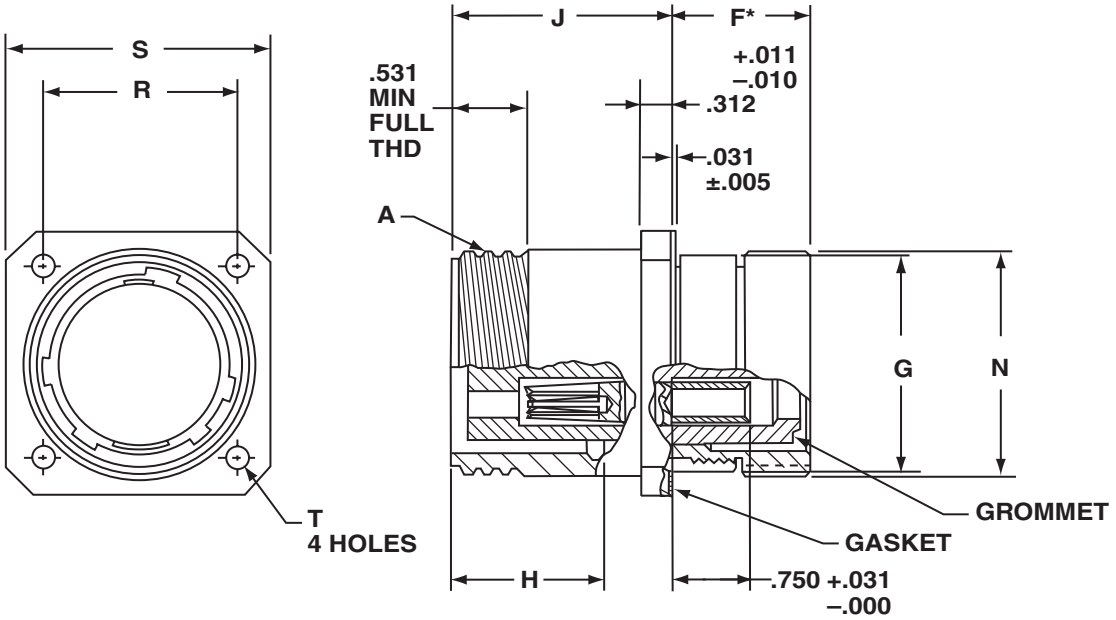

All dimensions for reference only.

Shell Size	A Thread Class 2A .1428P-.2857L Double Stub	F* ±.031	G Dia. +.006 –.010	H ±.005	J +.016 –.000	N Dia. +.011 –.020	R (BSC)	S +.021 –.020	T Dia. ±.005
28	2.000	1.376	1.938	1.514	2.188	2.000	1.844	2.375	.177
32	2.250	1.376	2.188	1.514	2.188	2.250	2.062	2.625	.209
44	3.000	1.438	3.062	1.733	2.532	3.125	2.812	3.375	.281
52	3.500	1.438	3.562	1.733	2.532	3.625	3.156	3.875	.281

To complete MS Part number see how to order, pg. 4.
Protective cover MS90563 is supplied as part of this connector assembly. Refer to page 15 for dimensions.
*F dimension applies only when rear nut is fully tightened

MIL-C-22992, Class L
MS90556
straight plug

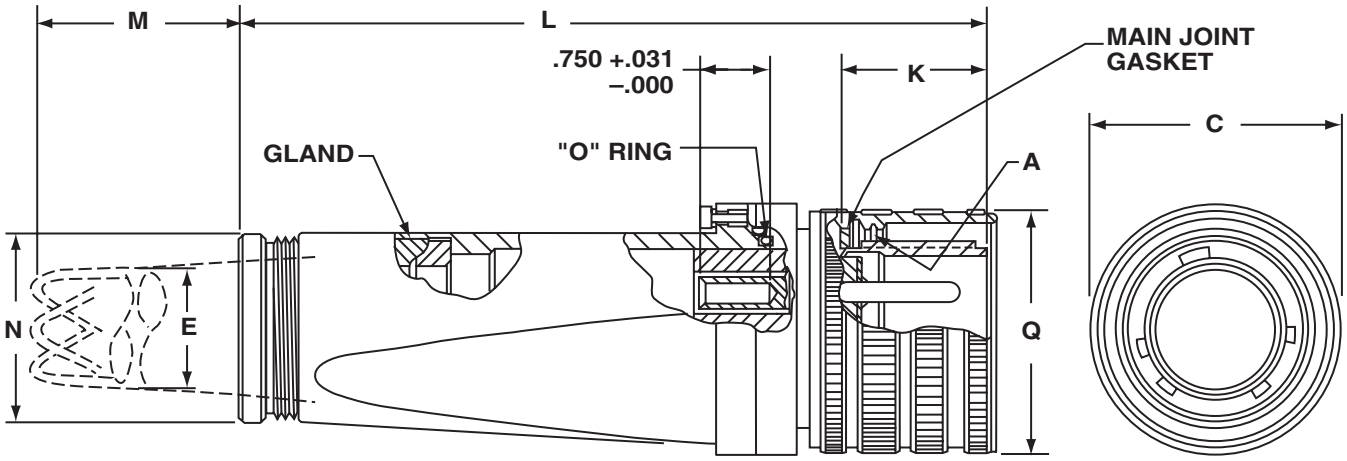

All dimensions for reference only.

Shell Size and Arrangement	A Thread Class 2B .1428P-.2857L Double Stub	C Dia. Max	E Cable Range	K ±.005	L Max Free Length	M Approx. Free Length	N Dia +.011 –.020	Q Dia. Max
28-12	2.000	2.439	1.047-.922	1.557	8.188	7.188	2.000	2.312
28-13			1.130-1.005			7.188		
32-04	2.250	2.689	.969-.844	1.557	8.188	7.188	2.000	2.562
32-05, -12			1.130-1.005			7.188		
32-13			1.342-1.217			8.688		
44-02	3.000	3.667	1.312-1.187	1.776	10.172	10.688	2.500	3.531
44-03			1.438-1.313			9.688		
44-12			1.516-1.391			10.688		
44-13			1.672-1.547			12.688		
44-51	3.000	3.667	1.734-1.609	1.776	10.172	11.688	2.500	3.531
44-52			1.525-1.435			11.188		
44-56			1.135-1.065			7.188		
52-12	3.500	4.167	2.328-2.183	1.776	11.109	17.188	3.250	4.016
52-13			2.453-2.308			18.188		

To complete MS Part number see how to order, pg. 4.
Protective cover MS90564 is supplied as part of this connector assembly. Refer to page 15 for dimensions.
Contact brushings MS3348 are supplied as part of connector as required. Refer to page 13 for dimensions.

MIL-C-22992, Class L
MS90557
cable connecting receptacle *without coupling ring*

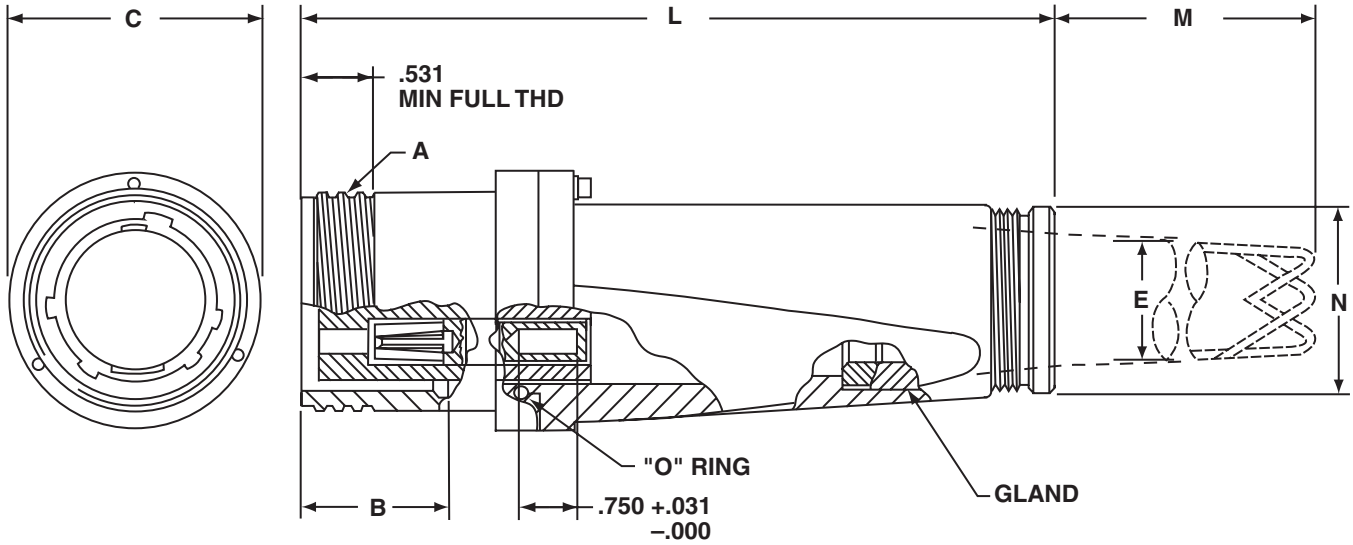

All dimensions for reference only.

Shell Size and Arrangement	A Thread Class 2A .1428P-.2857L Double Stub	B ±.005	C Dia. Max.	E Cable Range	L Max Free Length	M Approx. Free Length	N Dia +.011 –.020
28-12	2.000	1.514	2.439	1.047-.922	8.156	7.188	2.000
28-13				1.130-1.005		7.188	
32-04	2.250	1.514	2.689	.969-.844	8.156	7.188	2.000
32-05, -12				1.130-1.005		7.188	
32-13				1.342-1.217		8.688	
44-02	3.000	1.733	3.667	1.312-1.187	10.125	10.688	2.500
44-03				1.438-1.313		9.688	
44-12				1.516-1.391		10.688	
44-13				1.672-1.547		12.688	
44-51				1.734-1.609		11.688	
52-12	3.500	1.733	4.167	2.328-2.183	11.062	17.188	3.250
52-13				2.453-2.308		18.188	

To complete MS Part number see how to order, pg. 4.
Protective cover MS90563 is supplied as part of this connector assembly. Refer to page 15 for dimensions.
Contact bushings MS3348 are supplied as part of connector as required. Refer to page 13 for dimensions.

MIL-C-22992, Class L
MS90558
wall mount plug with coupling ring *(equipment end)*

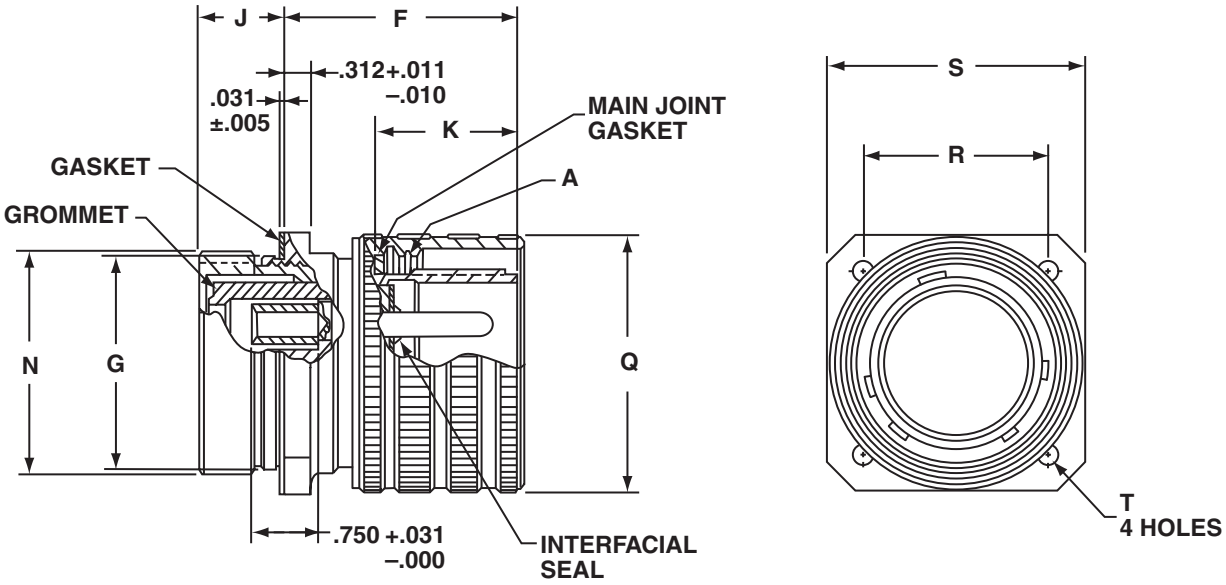

All dimensions for reference only.

Shell Size	A Thread Class 2B .1428P-.2857L Double Stub	J ±.031	G Dia +.006 –.010	F* +.016 –.000	K ±.005	N +.011 –.020	Q Dia. Max	R (BSC)	S +.021 –.020	T Dia. ±.005
28	2.000	.959	1.938	2.639	1.557	2.000	2.312	1.844	2.375	.177
32	2.250	.959	2.188	2.639	1.557	2.250	2.562	2.062	2.625	.209
44	3.000	1.021	3.062	2.998	1.776	3.125	3.531	2.812	3.375	.281
52	3.500	1.021	3.562	2.998	1.776	3.625	4.016	3.156	3.875	.281

To complete MS part number see how to order, pg. 4.
Protective cover MS90564 is supplied as part of this connector assembly. Refer to page 15 for dimensions.
* F dimension applies only when rear nut is fully tightened.

MIL-C-22992, Class L Accessories
contacts

M39029/48
pin contact

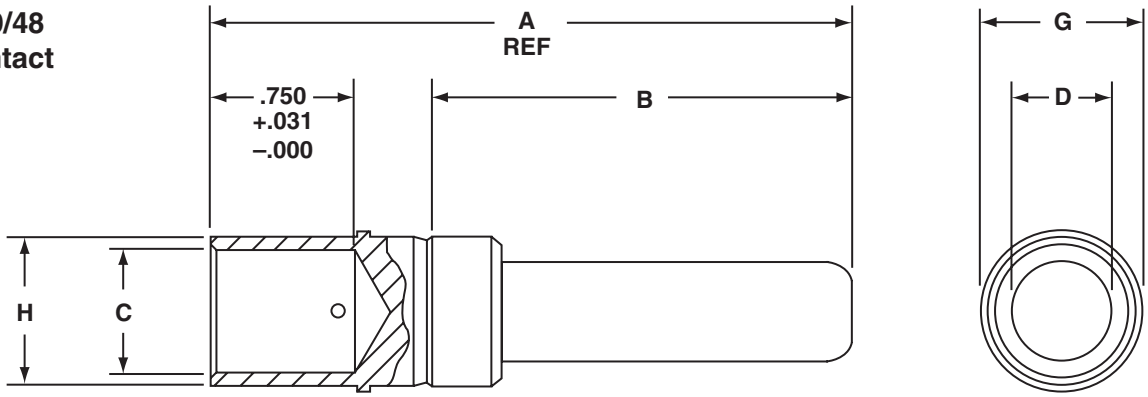

M39029/49
socket contact

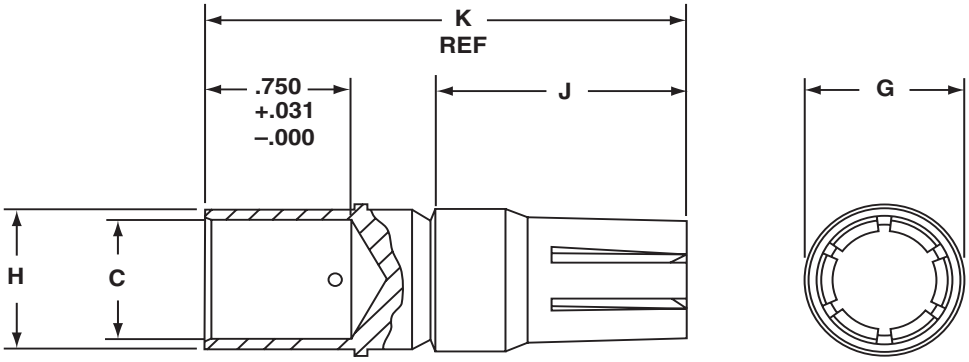

All dimensions for reference only.

Socket MS Part Number*	Pin MS Part Number	Contact Size	Wire Well Size	A Ref.	B ±.005	C Dia	D Dia ±.001	G Dia	H Dia	J ±.005	K Ref
M39029/49-335	M39029/48-327	4/0	4/0	3.207	2.097	.641 +.004 –.003	.500	.781 ± .003	.750 +.004 –.003	1.283	2.393
---	M39029/48-328	4/0N	4/0	3.325	2.215	.641 +.004 –.003	.500	.781 ± .003	.750 +.004 –.003	---	---
M39029/49-333	M39029/48-323	1/0	1	3.207	2.097	.406 +.004 –.003	.357	.609 ± .003	.506 +.004 –.003	1.283	2.393
---	M39029/48-324	1/0N	1	3.325	2.215	.406 +.004 –.003	.357	.609 ± .003	.506 +.004 –.003	---	---
M39029/49-331	M39029/48-320	4	4	2.786	1.738	.281 ±.002	.225	.417 ± .002	.374 ± .002	1.158	2.206
---	M39029/48-321	4N	4	2.904	1.856	.281 ±.002	.225	.417 ± .002	.374 ± .002	---	---
M39029/49-329	M39029/48-317	6	6	2.786	1.738	.234 ±.002	.178	.342 ± .002	.312 ± .002	1/158	2.206
---	M39029/48-318	6N	6	2.904	1.856	.234 ±.002	.178	.342 ± .002	.312 ± .002	---	---
M39029/49-332	M39029/48-322	4G	4	2.856	1.746	.281 ±.002	.225	.417 ± .002	.374 ± .002	1.752	2.862
M39029/49-330	M39029/48-319	6G	6	2.856	1.746	.234 ±.002	.178	.342 ± .002	.312 ± .002	1.752	2.862

*Order by MS part number listed for either socket or pin.

MIL-C-22992, Class L Accessories
contact bushing/removal tool

MS3348
contact bushing

All dimensions for reference only.

MS Part Number*	Contact Wire Barrel Size (Ref)	Wire Size (Ref)	A Dia +.010 –.003	B Dia +.002 –.003
MS3348-1 - 2L	1	2	.359	.396
MS3348-4 - 5L	4	5	.250	.272
MS3348-4 - 6L	4	6	.225	.272
MS3348-6 - 8L	6	8	.185	.225
MS3348-6 - 9L	6	9	.155	.225
MS3348-1 - 6L	1	6	.225	.396
MS3348-4 - 8L	4	8	.185	.272
MS3348-6 -10L	6	10	.136	.225
MS3348-4/0-2/0L	4/0	2/0	.500	.629

* Order by MS part number listed.

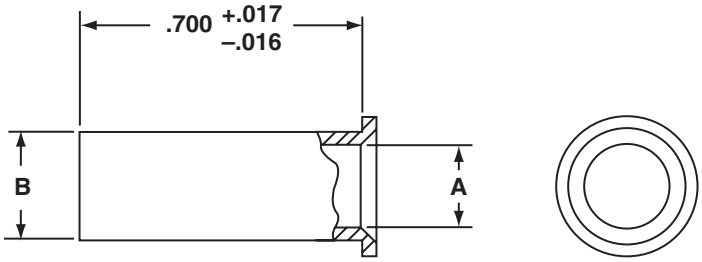

MS90562
contact removal tool

All dimensions for reference only.

MS Part Number*	Contact Size	A Dia +.000 –.002
MS90562-1	4/0	.790
MS90562-2	2/0	.696
MS90562-3	1/0	.558
MS90562-4	2	.462
MS90562-5	4	.376
MS90562-6	6	.354

* Order by MS part number listed.

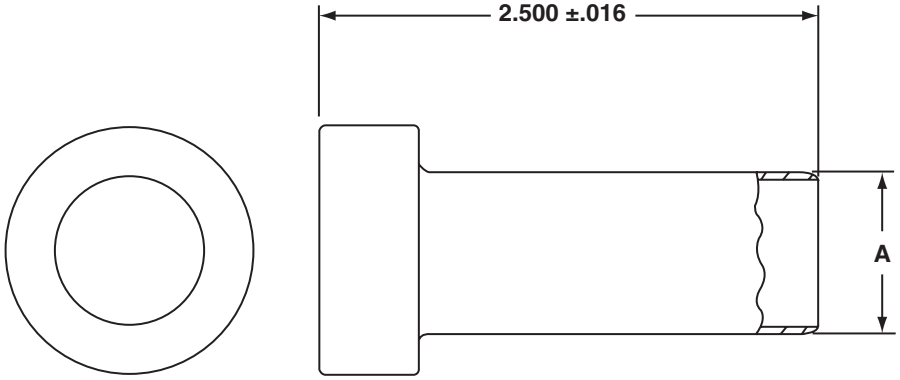

MIL-C-22992, Class L Accessories
cable strain relief/cable sealing gland

MS90561
cable strain relief

All dimensions for reference only.

MS Part Number*	Arrange-ment Number	A Dia +.000 –.010	H Dia Cable Range		L Approx.
			Max	Min	
MS90561-2	28-13, 32-12	1.797	1.145	1.003	8.000
MS90561-4	28-02, -04	1.797	.844	.688	7.500
MS90561-12	28-12	1.797	1.047	.891	8.000
MS90561-13	32-13	1.797	1.342	1.185	9.500
MS90561-15	44-12	2.235	1.516	1.360	11.500
MS90561-16	44-13	2.235	1.688	1.531	13.500
MS90561-17	52-12	2.922	2.328	2.039	18.000
MS90561-18	52-13	2.922	2.500	2.211	19.000
MS90561-19	44-51	2.235	1.750	1.550	12.500
MS90561-20	44-52	2.235	1.578	1.375	12.000
MS90561-21	44-56	2.235	1.160	1.010	8.000

* Order by MS part number listed.

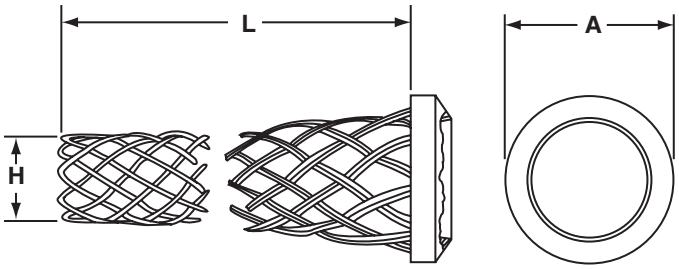

MS23747
cable sealing gland

All dimensions for reference only.

This gland must be used with MS90561 strain relief.

MS Part Number*	Arrange-ment Number	A Dia +.000 –.020	B Dia +.020 –.000	C ±.010	Min Cable Dia Ref.
MS23747-2	28-13, 32-05, -12	1.805	1.130	1.034	1.005
MS23747-12	28-12	1.805	1.047	1.034	.922
MS23747-13	32-13	1.805	1.342	1.034	1.217
MS23747-14	44-03	2.242	1.438	1.160	1.313
MS23747-15	44-12	2.242	1.516	1.160	1.391
MS23747-16	44-13	2.242	1.672	1.160	1.547
MS23747-18	52-12	2.927	2.328	1.284	2.183
MS23747-19	52-13	2.927	2.453	1.284	2.308
MS23747-20	44-51	2.242	1.734	1.160	1.609
MS23747-21	44-52	2.242	1.562	1.160	1.437
MS23747-22	44-56	2.242	1.150	1.160	1.025

* Order by MS part number listed.

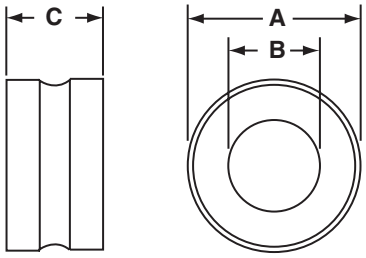

MIL-C-22992, Class L Accessories
protective covers

MS90563 protective covers
used with: MS90555 wall mount receptacle
MS90557 cable connecting receptacle

All dimensions for reference only.

MS Part Number*	Use with Shell Size	A Thread Class 2B .1428P-.2857L Double Stub	B Dia Ref		C Approx.
			For MS90555	For MS90557	
MS90563-1( )	28	2.000	.177	.177	6.000
MS90563-3( )	32	2.250	.209	–	4.500
MS90563-4( )	32	2.250	–	.177	6.000
MS90563-7( )	44	3.000	.281	.281	7.500
MS90563-11( )	52	3.500	.281	.281	7.500

* To complete MS part number, add letter C (Conductive) for AC or N (Non-conductive) for DC connector assemblies.

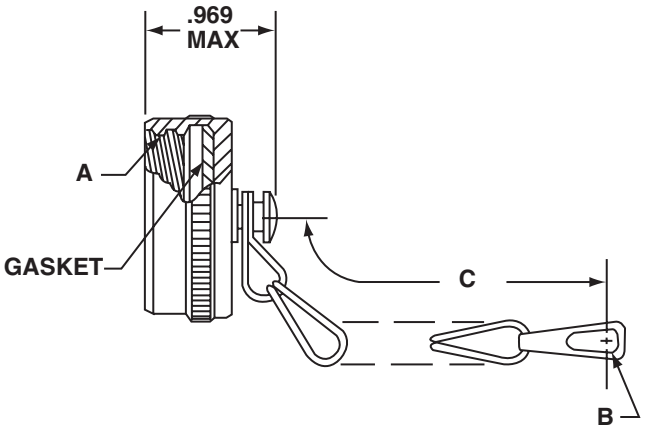

MS90564 protective covers
used with: MS90556 straight plug
MS90558 wall mount plug

All dimensions for reference only.

MS Part Number*	Use with Shell Size	A Thread Class 2A (Plated) .1428P-.2857L Double Stub	B Dia Ref		C Approx.	J Max
			For MS90556	For MS90558		
MS90564-1( )	28	2.000	.177	.177	7.500	2.266
MS90564-3( )	32	2.250	–	.209	6.000	2.266
MS90564-4( )	32	2.250	.177	–	7.500	2.266
MS90564-7( )	44	3.000	.281	.281	8.500	2.484
MS90564-11( )	52	3.500	.281	.281	8.500	2.484

* To complete MS part number, add letter C (Conductive) for AC or N (Non-conductive) for DC connector assemblies.

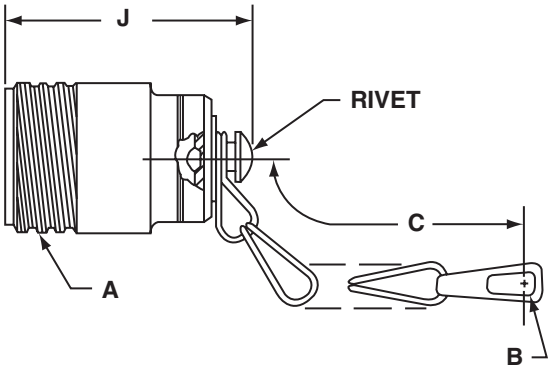

MIL-C-22992, Class L
installation instructions

Complete installation instructions (L-1014) for Class L connectors are available on request. Reproduced below are condensed assembly instructions to familiarize the user with the installation procedure and tooling required.

Cable Preparation (MS90556 and MS90557 connectors only)
The following table shows the standard wire color coding, generator terminal markings, and connector contact identification used with Class L connectors.

Standardized Generator Wiring and Connections

Generator Terminal Marking	Current	Contact Designation	Conductor Circuit	Wire Color
+ (POS)	28Vdc	A	Positive	Black
– (NEG) ground	28Vdc	N	Negative	White
L_1	AC	A	Phase A	Black
L_2	AC	B	Phase B	Red
L_3	AC	C	Phase C	Blue (Commercial may be orange)
L_0	AC	N	Neutral	White
G (or Gnd)	AC	G	Safety grounding	Green (Commercial may be bare)

Step 1) Determine cable lay to facilitate alignment of contacts and insert holes without wire crossing.

Step 2) Strip cable jacket to dimension shown. Avoid cutting or nicking individual conductor insulation.

Connector Size	D Inches Approx.
28	3.000
32	3.000
44	4.250
52	5.000

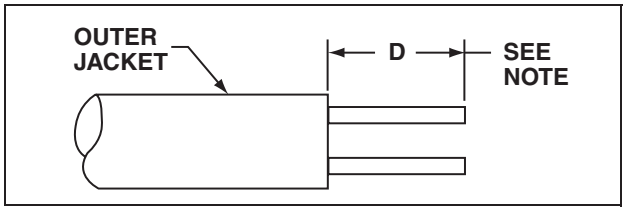

Note

Some insert arrangements require that two or more ground wires be terminated into one contact. Dimension D must therefore be increased to permit routing these wires around the larger conductors.

Step 3) Install connector components in the order shown in the applicable assembly view illustrated on pages17 and 18.

Step 4) Strip insulation of individual conductors to 3/4 inch from end of conductor.

MIL-C-22992, Class L
installation instructions

MS90555 Connector

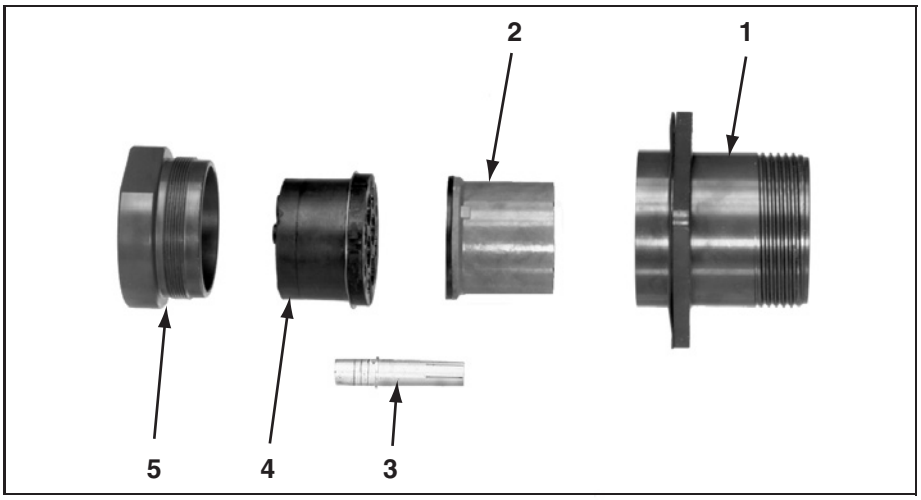

Wall Mount Receptacle Components:
1. Shell
2. Insert Assembly, Socket
3. Contact, Socket
4. Grommet Assembly, Socket
5. Nut, Retaining
6. Protective Cap Assembly (Not Shown)
7. Flange Gasket (Not Shown)

MS90556 Connector

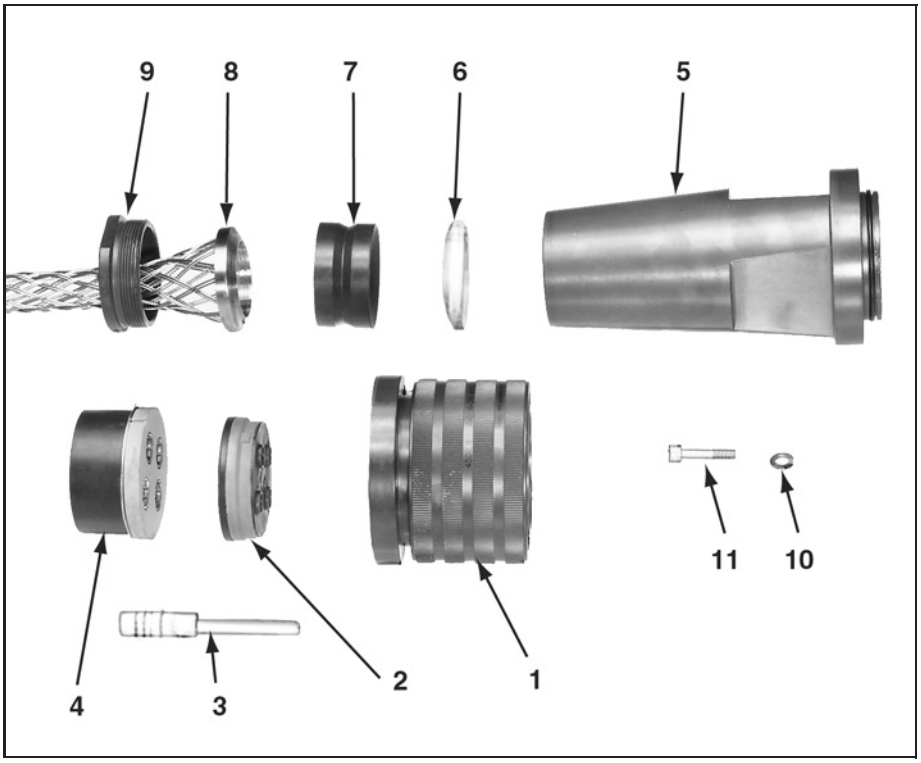

Straight Plug Components:
1. Shell and Coupling Nut Assembly
2. Insert Assembly, Pin
3. Contact, Pin
4. Spacer Assembly, Pin
5. Back Adapter
6. Gland Washer
7. Gland
8. Cable Grip
9. Gland Nut
10. Lockwasher (3 each)
11. Screw (3 each)
12. Protective Cap Assembly (Not Shown)

Note: On shell size 32 connectors, item #6 (Gland Washer) is contained within item #5 (Back Adaper).

MIL-C-22992, Class L
installation instructions

MS90557 Connector

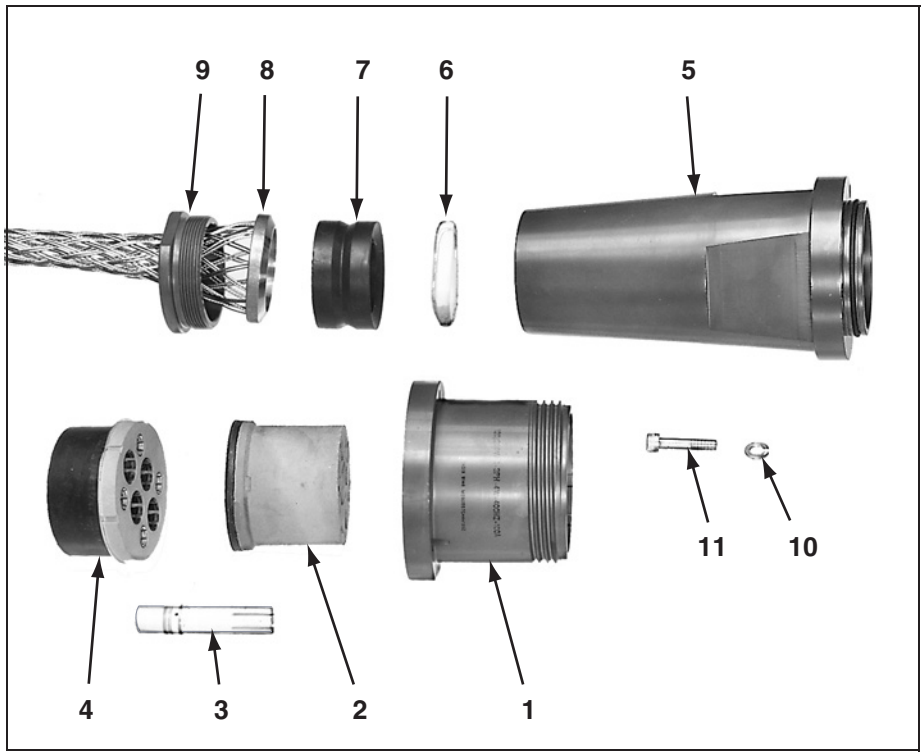

Note: On shell size 32 connectors, item #6 (Gland Washer) is contained within item #5 (Back Adaper).

Cable Connecting Receptacle Components:
1. Shell
2. Insert Assembly, Socket
3. Contact, Socket
4. Spacer Assembly, Socket
5. Back Adapter
6. Gland Washer
7. Gland
8. Cable Grip
9. Gland Nut
10. Lockwasher (3 each)
11. Screw (3 each)
12. Protective Cap Assembly (Not shown)

MS90558 Connector

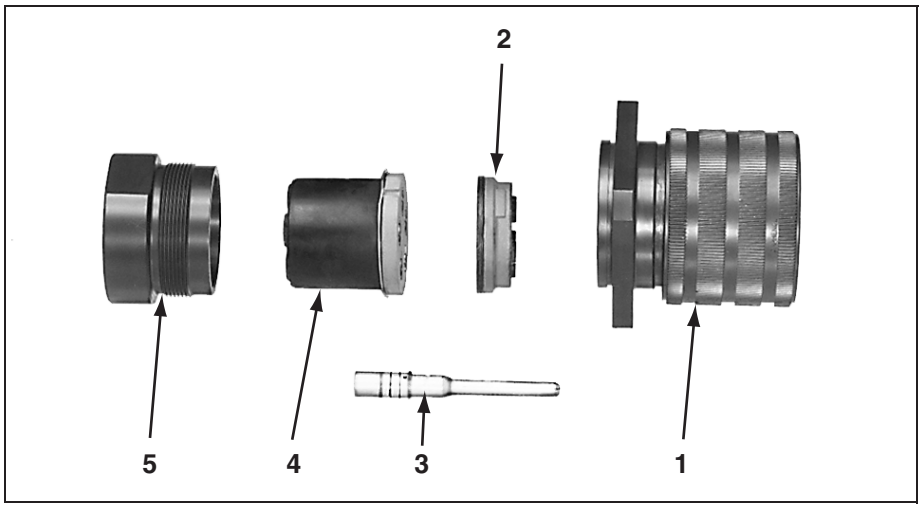

Wall Mount Plug Components:
1. Shell and Coupling Nut Assembly
2. Insert Assembly, Pin
3. Contact, Pin
4. Grommet Assembly, Pin
5. Nut, Retaining
6. Protective Cap Assembly (Not Shown)
7. Flange Gasket (Not Shown)

MIL-C-22992, Class L
installation instructions

Contact Installation

Step 1) Insert stripped conductors in contact wirewells. If contact bushing is used, insert conductor in bushing and bushing in contact wirewell. If two or more ground wires are inserted into a single contact, make sure all wires are fully seated in wirewell.

Step 2) Select correct crimping tool, locater and die combination from the table for contacts to be installed. With conductor or contact bushing in place, insert contact into tool. Close crimping die fully to form a uniform crimp.

Contact Part Number	Size	Type	Crimping Tool*	Locator*	Die*	Removal Tool
M39029/48-327	4/0	P	Pico Model			
M39029/49-335	4/0	S	400B or	4297-1	414DA-4/0N-1	MS90562-1
M39029/48-328	4/0N	P	400B-1			
M39029/48-323	1/0	P	Pico Model			
M39029/49-333	1/0	S	400B or	4297-3	414DA-1/0N	MS90562-3
M39029/48-324	1/0N	P	400B-1			
M39029/48-320	4	P				
M39029/49-331	4	S	Pico Model			
M39029/48-321	4N	P	400B or	4297-5	414DA-4N	MS90562-5
M39029/48-322	4G	P	400B-1			
M39029/49-332	4G	S				
M39029/48-317	6	P				
M39029/49-329	6	S	Pico Model			
M39029/48-318	6N	P	400B or	4297-6	414DA-6N	MS90562-6
M39029/48-319	6G	P	400B-1			
M39029/49-330	6G	S				

* Available from Pico Crimping Tools Co.,
9832 Jersey Ave.
Santa Fe Springs, CA 90670
Phone: 805-388-5510

If crimping tools are available, contacts may be affixed to conductors by soldering. Use rosin-alcohol solder flux, a good grade of 60/40 solder and a 500 watt soldering iron or probe type resistance soldering equipment. Pre-tin conductors before soldering. Solder must not be present on shoulder or retention area of contact.

Connector Assembly

Step 1) If inserts are not already positioned in the connector shell, align large tab on insert with large slot in shell and push insert in until it bottoms in shell.

Step 2) Apply a thin coating of Dow Corning DC-4 lubricant to the periphery of contact holes in spacer or grommet assembly. Push contacts into rear of spacer or grommet assembly until locked into contact retainer bushing.

Step 3) Align contacts with proper holes in insert. Small key of insert must be aligned with appropriate keyway in spacer or grommet assembly. Slide contacts into insert holes until spacer or grommet assembly butts against insert. A thin film of Dow Corning DC-4 lubricant applied to the periphery of insert contact holes will provide maximum sealing efficiency.

Step 4) Assemble accessories to connector. The back adapter “O” ring should have a very thin film of Dow Corning DC-4 lubricant applied. Outer surfaces only of gland should be lubricated with a thin film of UniTemp Grease EP. Avoid getting grease on inside surfaces of gland and on cable jacket.

Step 5) Tighten retaining nut or gland nut on shell or adapter. A metal-to-metal seating condition is desireable, but may not be attainable with maximum cable diameters.

Contact Removal

Step 1) Loosen all rear accessories and slide back along cable.

Step 2) Remove spacer or grommet assembly with contacts from connector insert.

Step 3) Using the appropriate size contact removal tool, push tool over front of contact until it bottoms in spacer or grommet assembly hole. This will open contact retaining bushing and allow contact to be removed from the spacer or grommet assembly from the rear. When using jacketed cable, all contacts should be released from contact retention bushings before removal from spacer or grommet assembly is accomplished.