THIS DRAWING IS A CONTROLLED DOCUMENT FOR TYCO ELECTRONICS CORPORATION
IT IS SUBJECT TO CHANGE AND THE CONTROLLING ENGINEERING ORGANIZATION
SHOULD BE CONTACTED FOR THE LATEST REVISION.

LOC	DIST
E	B

REVISIONS

P	LTR	DESCRIPTION	DATE	DWN	APVD
	BA	NEW RELEASE	22-OCT-09	MRS	St.P

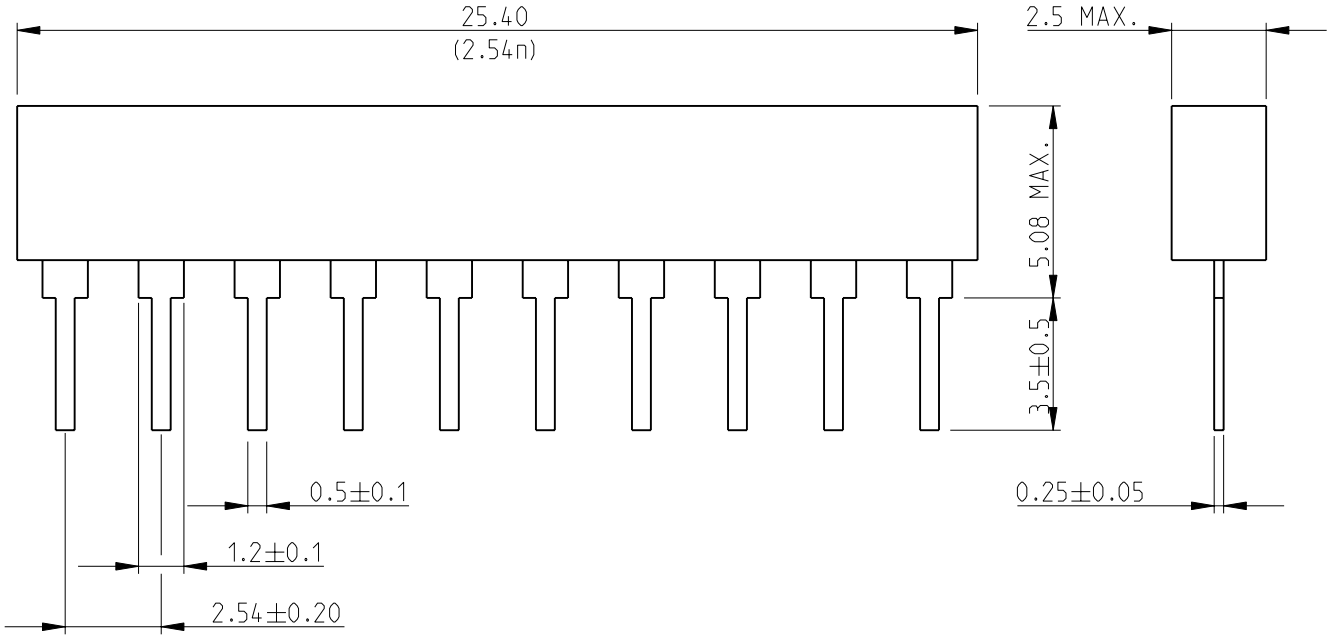

RoHS Compliant

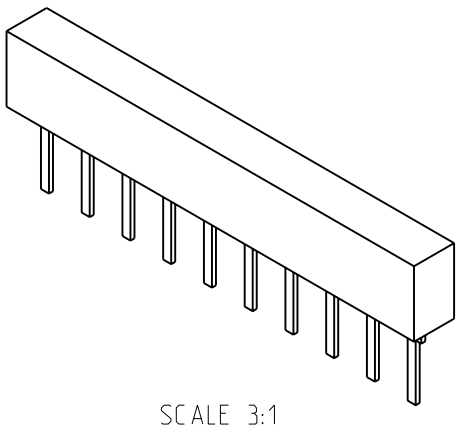

SCALE 3:1

1. n = NUMBER OF PINS

2. FOR FURTHER INFORMATION SEE DATA SHEET FOR SERIES SIL, GENERAL PURPOSE RESISTOR NETWORKS

THIS DRAWING IS UNPUBLISHED. RELEASED FOR PUBLICATION 2009
© COPYRIGHT 2009 BY TYCO ELECTRONICS CORPORATION. ALL RIGHTS RESERVED.

DIMENSIONS: mm

TOLERANCES UNLESS OTHERWISE SPECIFIED:

0 PLC	±0.2
1 PLC	±0.1
2 PLC	±-
3 PLC	±-
4 PLC	±-
ANGLES	±5°

DWN	MAHARUDRA	22-OCT-09
CHK	ALLAN.P	22-OCT-09
APVD	STEPHEN.P	22-OCT-09

PRODUCT SPEC: -

APPLICATION SPEC: -

WEIGHT: -

MATERIAL: -

FINISH: -

Tyco Electronics

Tyco Electronics Corporation
Dorcan, Swindon, SN3 5HH

NAME: GENERAL PURPOSE RESISTOR NETWORKS
SIL10 RESISTOR NETWORKS

SIZE	CAGE CODE	DRAWING NO	RESTRICTED TO
A4	00779	C-1622807	-

CUSTOMER DRAWING

SCALE	SHEET	OF	REV
5:1	1	1	BA

AMP 1469-35 REV 31MAR2000

Pro/ENGINEER DRAWING