PART NAME: KNOB	SCALE: 2:1	DATE: 11/20/95	DR. BY RF

THIS DRAWING IS THE PROPERTY OF DAVIES MOLDING COMPANY, IS SUBMITTED SOLELY AS A DESIGN OR ENGINEERING PROJECT. WE ACCEPT NO RESPONSIBILITY WHATSOEVER FOR THE PRACTICAL APPLICATION OF THE PIECES MADE TO THIS DESIGN.

DAVIES MOLDING

DESIGNERS & MANUFACTURERS OF KNOBS, HANDLES, CASES & CUSTOM PLASTIC COMPONENTS

P/N 7094-A

M NO. 7094

CAVITY	7094
CORE	7094-A
BUSHING	7094-A-30t
INSERT	10215
EJECT PIN	7094

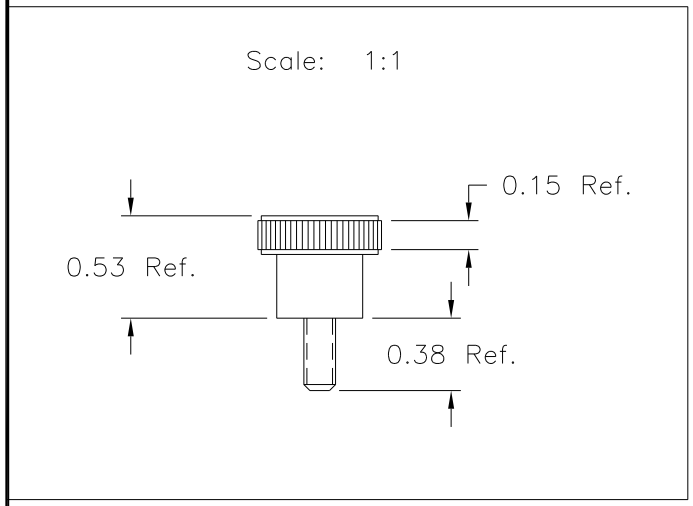

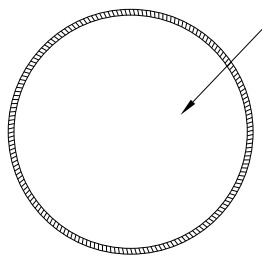

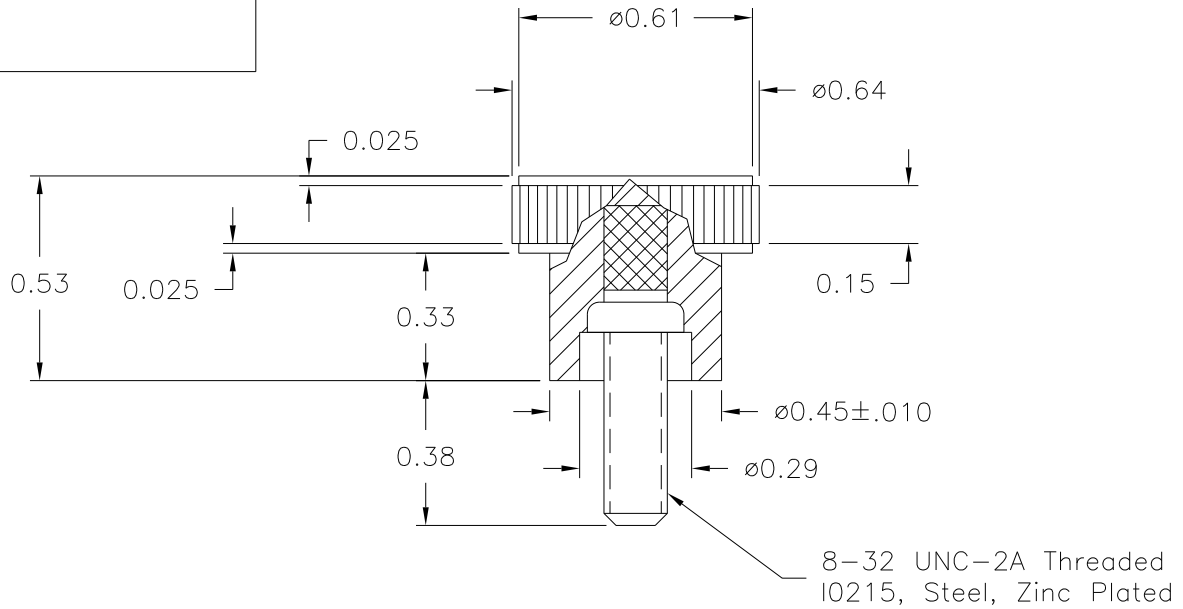

MATERIAL: 20% TALC FILLED POLYPROPYLENE
COLOR: BLACK

TOLERANCES: UNLESS OTHERWISE SPECIFIED	DO NOT SCALE DRAWING
DECIMALS: X.XXX ± .005 X.XX ± .015	MM: X.XX ± 0.15MM X.X ± 0.4MM
FRACTIONS ± 1/64	ANG. ± 1°

D	Textured Top Surface Only (MT-11000)		
–	Corrected Drawing	TL	4/23/99
D	Was 7094	MH	2/2/99
C	20% TALC FILLED PP WAS HIPS	MP	12/15/98
B	ADDED DWG. DETAILS	HD	1/5/98
A	.604 WAS .0604	RF	10/8/96
–	UPDATED DWG.	HD	1/29/96
–	UPDATED DWG.	HD	9/29/95
–	UPDATED DWG.	HD	9/11/95

CHANGES