74LVC2T45; 74LVCH2T45

Dual supply translating transceiver; 3-state

Rev. 9 — 13 August 2018 Product data sheet

1. General description

The 74LVC2T45; 74LVCH2T45 are dual bit, dual supply translating transceivers with 3-state outputs that enable bidirectional level translation. They feature two 2-bits input-output ports (nA and nB), a direction control input (DIR) and dual supply pins ($V_{CC(A)}$ and $V_{CC(B)}$). Both $V_{CC(A)}$ and $V_{CC(B)}$ can be supplied at any voltage between 1.2 V and 5.5 V making the device suitable for translating between any of the low voltage nodes (1.2 V, 1.5 V, 1.8 V, 2.5 V, 3.3 V and 5.0 V). Pins nA and DIR are referenced to $V_{CC(A)}$ and pins nB are referenced to $V_{CC(B)}$. A HIGH on DIR allows transmission from nA to nB and a LOW on DIR allows transmission from nB to nA.

The devices are fully specified for partial power-down applications using I_{OFF}. The I_{OFF} circuitry disables the output, preventing any damaging backflow current through the device when it is powered down. In suspend mode when either $V_{CC(A)}$ or $V_{CC(B)}$ are at GND level, both A port and B port are in the high-impedance OFF-state.

Active bus hold circuitry in the 74LVCH2T45 holds unused or floating data inputs at a valid logic level.

2. Features and benefits

- Wide supply voltage range:
  - $V_{CC(A)}$: 1.2 V to 5.5 V
  - $V_{CC(B)}$: 1.2 V to 5.5 V
- High noise immunity
- Complies with JEDEC standards:
  - JESD8-7 (1.2 V to 1.95 V)
  - JESD8-5 (1.8 V to 2.7 V)
  - JESD8C (2.7 V to 3.6 V)
  - JESD36 (4.5 V to 5.5 V)
- ESD protection:
  - HBM JESD22-A114F Class 3A exceeds 4000 V
  - MM JESD22-A115-A exceeds 200 V
  - CDM JESD22-C101E exceeds 1000 V
- Maximum data rates:
  - 420 Mbps (3.3 V to 5.0 V translation)
  - 210 Mbps (translate to 3.3 V))
  - 140 Mbps (translate to 2.5 V)
  - 75 Mbps (translate to 1.8 V)
  - 60 Mbps (translate to 1.5 V)
- Suspend mode
- Latch-up performance exceeds 100 mA per JESD 78 Class II
- ±24 mA output drive (V_{CC} = 3.0 V)
- Inputs accept voltages up to 5.5 V
- Low power consumption: 16 μA maximum I_{CC}
- I_{OFF} circuitry provides partial Power-down mode operation
- Multiple package options
- Specified from -40 °C to +85 °C and -40 °C to +125 °C

nexperia

3. Ordering information

Table 1. Ordering information

Type number	Package			
	Temperature range	Name	Description	Version
74LVC2T45DC	-40 °C to +125 °C	VSSOP8	plastic very thin shrink small outline package; 8 leads; body width 2.3 mm	SOT765-1
74LVCH2T45DC				
74LVC2T45GT	-40 °C to +125 °C	XSON8	plastic extremely thin small outline package; no leads; 8 terminals; body 1 × 1.95 × 0.5 mm	SOT833-1
74LVCH2T45GT				
74LVC2T45GF	-40 °C to +125 °C	XSON8	extremely thin small outline package; no leads; 8 terminals; body 1.35 × 1 × 0.5 mm	SOT1089
74LVCH2T45GF				
74LVC2T45GM	-40 °C to +125 °C	XQFN8	plastic, extremely thin quad flat package; no leads; 8 terminals; body 1.6 × 1.6 × 0.5 mm	SOT902-2
74LVCH2T45GM				
74LVC2T45GN	-40 °C to +125 °C	XSON8	extremely thin small outline package; no leads; 8 terminals; body 1.2 × 1.0 × 0.35 mm	SOT1116
74LVCH2T45GN				
74LVC2T45GS	-40 °C to +125 °C	XSON8	extremely thin small outline package; no leads; 8 terminals; body 1.35 × 1.0 × 0.35 mm	SOT1203
74LVCH2T45GS				

4. Marking

Table 2. Marking

Type number	Marking code [1]
74LVC2T45DC	V45
74LVCH2T45DC	X45
74LVC2T45GT	V45
74LVCH2T45GT	X45
74LVC2T45GF	V5
74LVCH2T45GF	X5
74LVC2T45GM	V45
74LVCH2T45GM	X45
74LVC2T45GN	V5
74LVCH2T45GN	X5
74LVC2T45GS	V5
74LVCH2T45GS	X5

[1] The pin 1 indicator is located on the lower left corner of the device, below the marking code.

All information provided in this document is subject to legal disclaimers.

© Nexperia B.V. 2018. All rights reserved

5. Functional diagram

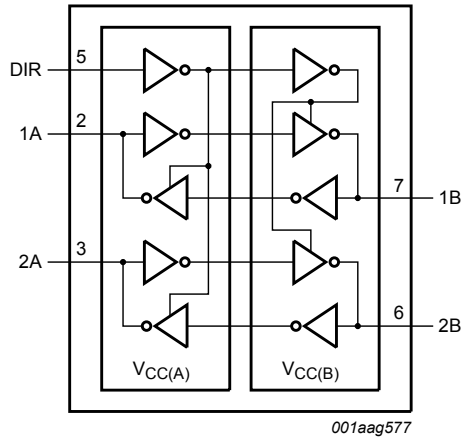

Fig. 1. Logic symbol

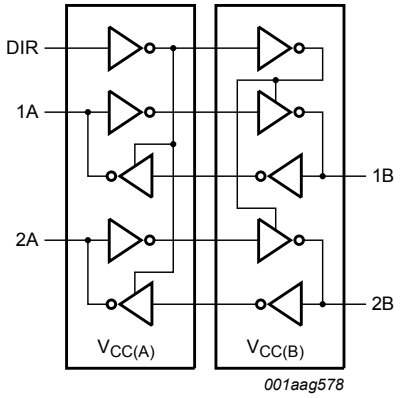

Fig. 2. Logic diagram

6. Pinning information

6.1. Pinning

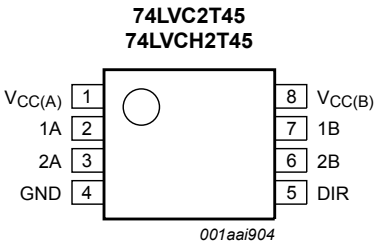

Fig. 3. Pin configuration SOT765-1 (VSSOP8)

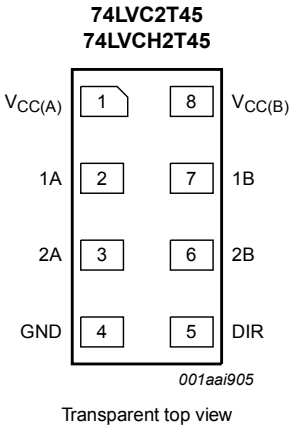

Fig. 4. Pin configuration SOT833-1, SOT1089, SOT1116 and SOT1203 (XSON8)

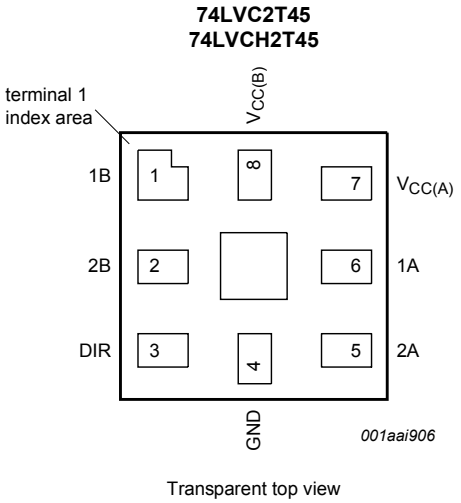

Fig. 5. Pin configuration SOTSOT902-2 (XQFN8)

All information provided in this document is subject to legal disclaimers.

© Nexperia B.V. 2018. All rights reserved

6.2. Pin description

Table 3. Pin description

Symbol	Pin		Description
	SOT765-1, SOT833-1, SOT1089, SOT1116 and SOT1203	SOT902-2	
$V_{CC(A)}$	1	7	supply voltage A (port A and DIR)
1A	2	6	data input or output
2A	3	5	data input or output
GND	4	4	ground (0 V)
DIR	5	3	direction control
2B	6	2	data input or output
1B	7	1	data input or output
$V_{CC(B)}$	8	8	supply voltage B (port B)

7. Functional description

Table 4. Function table

H = HIGH voltage level; L = LOW voltage level; X = don't care; Z = high-impedance OFF-state.

Supply voltage	Input	Input/output [1]	
$V_{CC(A)}$, $V_{CC(B)}$	DIR	nA	nB
1.2 V to 5.5 V	L	nA = nB	input
1.2 V to 5.5 V	H	input	nB = nA
GND [2]	X	Z	Z

[1] The input circuit of the data I/O is always active.
[2] When either $V_{CC(A)}$ or $V_{CC(B)}$ is at GND level, the device goes into suspend mode.

All information provided in this document is subject to legal disclaimers.

© Nexperia B.V. 2018. All rights reserved

8. Limiting values

Table 5. Limiting values

In accordance with the Absolute Maximum Rating System (IEC 60134). Voltages are referenced to GND (ground = 0 V).

Symbol	Parameter	Conditions		Min	Max	Unit
$V_{CC(A)}$	supply voltage A			-0.5	+6.5	V
$V_{CC(B)}$	supply voltage B			-0.5	+6.5	V
I_{IK}	input clamping current	V_I < 0 V		-50	-	mA
V_I	input voltage		[1]	-0.5	+6.5	V
I_{OK}	output clamping current	V_O < 0 V		-50	-	mA
V_O	output voltage	Active mode	[1][2][3]	-0.5	V_{CCO} + 0.5	V
		Suspend or 3-state mode	[1]	-0.5	+6.5	V
I_O	output current	V_O = 0 V to V_{CCO}	[2]	-	±50	mA
I_{CC}	supply current	$I_{CC(A)}$ or $I_{CC(B)}$		-	100	mA
I_{GND}	ground current			-100	-	mA
T_{stg}	storage temperature			-65	+150	°C
P_{tot}	total power dissipation	T_{amb} = -40 °C to +125 °C	[4]	-	250	mW

[1] The minimum input voltage ratings and output voltage ratings may be exceeded if the input and output current ratings are observed.
[2] V_{CCO} is the supply voltage associated with the output port.
[3] V_{CCO} + 0.5 V should not exceed 6.5 V.
[4] For VSSOP8 packages: above 110 °C the value of P_{tot} derates linearly with 8.0 mW/K.
For XSON8 and XQFN8 packages: above 118 °C the value of P_{tot} derates linearly with 7.8 mW/K.

9. Recommended operating conditions

Table 6. Recommended operating conditions

Symbol	Parameter	Conditions		Min	Max	Unit
$V_{CC(A)}$	supply voltage A			1.2	5.5	V
$V_{CC(B)}$	supply voltage B			1.2	5.5	V
V_I	input voltage			0	5.5	V
V_O	output voltage	Active mode	[1]	0	V_{CCO}	V
		Suspend or 3-state mode		0	5.5	V
T_{amb}	ambient temperature			-40	+125	°C
Δt/ΔV	input transition rise and fall rate	V_{CCI} = 1.2 V	[2]	-	20	ns/V
		V_{CCI} = 1.4 V to 1.95 V		-	20	ns/V
		V_{CCI} = 2.3 V to 2.7 V		-	20	ns/V
		V_{CCI} = 3 V to 3.6 V		-	10	ns/V
		V_{CCI} = 4.5 V to 5.5 V		-	5	ns/V

[1] V_{CCO} is the supply voltage associated with the output port.
[2] V_{CCI} is the supply voltage associated with the input port.

All information provided in this document is subject to legal disclaimers.

© Nexperia B.V. 2018. All rights reserved

10. Static characteristics

Table 7. Typical static characteristics at T_{amb} = 25 °C

At recommended operating conditions; voltages are referenced to GND (ground = 0 V).

Symbol	Parameter	Conditions		Min	Typ	Max	Unit
V_{OH}	HIGH-level output voltage	$V_I = V_{IH}$ or V_{IL}; I_O = -3 mA; V_{CCO} = 1.2 V	[1]	-	1.09	-	V
V_{OL}	LOW-level output voltage	$V_I = V_{IH}$ or V_{IL}; I_O = 3 mA; V_{CCO} = 1.2 V	[1]	-	0.07	-	V
I_I	input leakage current	DIR input; V_I = 0 V to 5.5 V; V_{CCI} = 1.2 V to 5.5 V	[2]	-	-	±1	μA
I_{BHL}	bus hold LOW current	A or B port; V_I = 0.42 V; V_{CCI} = 1.2 V	[2]	-	19	-	μA
I_{BHH}	bus hold HIGH current	A or B port; V_I = 0.78 V; V_{CCI} = 1.2 V	[2]	-	-19	-	μA
I_{BHLO}	bus hold LOW overdrive current	A or B port; V_{CCI} = 1.2 V	[2][3]	-	19	-	μA
I_{BHHO}	bus hold HIGH overdrive current	A or B port; V_{CCI} = 1.2 V	[2][3]	-	-19	-	μA
I_{OZ}	OFF-state output current	A or B port; V_O = 0 V or V_{CCO}; V_{CCO} = 1.2 V to 5.5 V	[1]	-	-	±1	μA
I_{OFF}	power-off leakage current	A port; V_I or V_O = 0 V to 5.5 V; $V_{CC(A)}$ = 0 V; $V_{CC(B)}$ = 1.2 V to 5.5 V		-	-	±1	μA
		B port; V_I or V_O = 0 V to 5.5 V; $V_{CC(B)}$ = 0 V; $V_{CC(A)}$ = 1.2 V to 5.5 V		-	-	±1	μA
C_I	input capacitance	DIR input; V_I = 0 V or 3.3 V; $V_{CC(A)} = V_{CC(B)}$ = 3.3 V		-	2.2	-	pF
$C_{I/O}$	input/output capacitance	A and B port; suspend mode; V_O = 3.3 V or 0 V; $V_{CC(A)} = V_{CC(B)}$ = 3.3 V		-	6.0	-	pF

[1] V_{CCO} is the supply voltage associated with the output port.
[2] V_{CCI} is the supply voltage associated with the data input port.
[3] To guarantee the node switches, an external driver must source/sink at least I_{BHLO}/I_{BHHO} when the input is in the range V_{IL} to V_{IH}.

Table 8. Static characteristics

At recommended operating conditions; voltages are referenced to GND (ground = 0 V).

Symbol	Parameter	Conditions		-40 °C to +85 °C		-40 °C to +125 °C		Unit
				Min	Max	Min	Max	
V_{IH}	HIGH-level input voltage	data input	[1]					
		V_{CCI} = 1.2 V		$0.8V_{CCI}$	-	$0.8V_{CCI}$	-	V
		V_{CCI} = 1.4 V to 1.95 V		$0.65V_{CCI}$	-	$0.65V_{CCI}$	-	V
		V_{CCI} = 2.3 V to 2.7 V		1.7	-	1.7	-	V
		V_{CCI} = 3.0 V to 3.6 V		2.0	-	2.0	-	V
		V_{CCI} = 4.5 V to 5.5 V		$0.7V_{CCI}$	-	$0.7V_{CCI}$	-	V
		DIR input						
		V_{CCI} = 1.2 V		$0.8V_{CC(A)}$	-	$0.8V_{CC(A)}$	-	V
		V_{CCI} = 1.4 V to 1.95 V		$0.65V_{CC(A)}$	-	$0.65V_{CC(A)}$	-	V
		V_{CCI} = 2.3 V to 2.7 V		1.7	-	1.7	-	V
		V_{CCI} = 3.0 V to 3.6 V		2.0	-	2.0	-	V
		V_{CCI} = 4.5 V to 5.5 V		$0.7V_{CC(A)}$	-	$0.7V_{CC(A)}$	-	V

All information provided in this document is subject to legal disclaimers.

© Nexperia B.V. 2018. All rights reserved

Symbol	Parameter	Conditions	-40 °C to +85 °C		-40 °C to +125 °C		Unit
			Min	Max	Min	Max	
V_{IL}	LOW-level input voltage	data input [1]					
		V_{CCI} = 1.2 V	-	$0.2V_{CCI}$	-	$0.2V_{CCI}$	V
		V_{CCI} = 1.4 V to 1.95 V	-	$0.35V_{CCI}$	-	$0.35V_{CCI}$	V
		V_{CCI} = 2.3 V to 2.7 V	-	0.7	-	0.7	V
		V_{CCI} = 3.0 V to 3.6 V	-	0.8	-	0.8	V
		V_{CCI} = 4.5 V to 5.5 V	-	$0.3V_{CCI}$	-	$0.3V_{CCI}$	V
		DIR input					
		V_{CCI} = 1.2 V	-	$0.2V_{CC(A)}$	-	$0.2V_{CC(A)}$	V
		V_{CCI} = 1.4 V to 1.95 V	-	$0.35V_{CC(A)}$	-	$0.35V_{CC(A)}$	V
		V_{CCI} = 2.3 V to 2.7 V	-	0.7	-	0.7	V
		V_{CCI} = 3.0 V to 3.6 V	-	0.8	-	0.8	V
		V_{CCI} = 4.5 V to 5.5 V	-	$0.3V_{CC(A)}$	-	$0.3V_{CC(A)}$	V
V_{OH}	HIGH-level output voltage	$V_I = V_{IH}$					
		I_O = -100 μA; V_{CCO} = 1.2 V to 4.5 V [2]	V_{CCO} - 0.1	-	V_{CCO} - 0.1	-	V
		I_O = -6 mA; V_{CCO} = 1.4 V	1.0	-	1.0	-	V
		I_O = -8 mA; V_{CCO} = 1.65 V	1.2	-	1.2	-	V
		I_O = -12 mA; V_{CCO} = 2.3 V	1.9	-	1.9	-	V
		I_O = -24 mA; V_{CCO} = 3.0 V	2.4	-	2.4	-	V
		I_O = -32 mA; V_{CCO} = 4.5 V	3.8	-	3.8	-	V
V_{OL}	LOW-level output voltage	$V_I = V_{IL}$ [2]					
		I_O = 100 μA; V_{CCO} = 1.2 V to 4.5 V	-	0.1	-	0.1	V
		I_O = 6 mA; V_{CCO} = 1.4 V	-	0.3	-	0.3	V
		I_O = 8 mA; V_{CCO} = 1.65 V	-	0.45	-	0.45	V
		I_O = 12 mA; V_{CCO} = 2.3 V	-	0.3	-	0.3	V
		I_O = 24 mA; V_{CCO} = 3.0 V	-	0.55	-	0.55	V
		I_O = 32 mA; V_{CCO} = 4.5 V	-	0.55	-	0.55	V
I_I	input leakage current	DIR input; V_I = 0 V to 5.5 V; V_{CCI} = 1.2 V to 5.5 V	-	±2	-	±10	μA
I_{BHL}	bus hold LOW current	A or B port [1]					
		V_I = 0.49 V; V_{CCI} = 1.4 V	15	-	10	-	μA
		V_I = 0.58 V; V_{CCI} = 1.65 V	25	-	20	-	μA
		V_I = 0.70 V; V_{CCI} = 2.3 V	45	-	45	-	μA
		V_I = 0.80 V; V_{CCI} = 3.0 V	100	-	80	-	μA
		V_I = 1.35 V; V_{CCI} = 4.5 V	100	-	100	-	μA
I_{BHH}	bus hold HIGH current	A or B port [1]					
		V_I = 0.91 V; V_{CCI} = 1.4 V	-15	-	-10	-	μA
		V_I = 1.07 V; V_{CCI} = 1.65 V	-25	-	-20	-	μA
		V_I = 1.60 V; V_{CCI} = 2.3 V	-45	-	-45	-	μA
		V_I = 2.00 V; V_{CCI} = 3.0 V	-100	-	-80	-	μA
		V_I = 3.15 V; V_{CCI} = 4.5 V	-100	-	-100	-	μA

All information provided in this document is subject to legal disclaimers.

© Nexperia B.V. 2018. All rights reserved

Symbol	Parameter	Conditions	-40 °C to +85 °C		-40 °C to +125 °C		Unit
			Min	Max	Min	Max	
I_{BHLO}	bus hold LOW overdrive current	A or B port [1][3]					
		V_{CCI} = 1.6 V	125	-	125	-	μA
		V_{CCI} = 1.95 V	200	-	200	-	μA
		V_{CCI} = 2.7 V	300	-	300	-	μA
		V_{CCI} = 3.6 V	500	-	500	-	μA
		V_{CCI} = 5.5 V	900	-	900	-	μA
I_{BHHO}	bus hold HIGH overdrive current	A or B port [1][3]					
		V_{CCI} = 1.6 V	-125	-	-125	-	μA
		V_{CCI} = 1.95 V	-200	-	-200	-	μA
		V_{CCI} = 2.7 V	-300	-	-300	-	μA
		V_{CCI} = 3.6 V	-500	-	-500	-	μA
		V_{CCI} = 5.5 V	-900	-	-900	-	μA
I_{OZ}	OFF-state output current	A or B port; V_O = 0 V or V_{CCO}; V_{CCO} = 1.2 V to 5.5 V [2]	-	±2	-	±10	μA
I_{OFF}	power-off leakage current	A port; V_I or V_O = 0 V to 5.5 V; $V_{CC(A)}$ = 0 V; $V_{CC(B)}$ = 1.2 V to 5.5 V	-	±2	-	±10	μA
		B port; V_I or V_O = 0 V to 5.5 V; $V_{CC(B)}$ = 0 V; $V_{CC(A)}$ = 1.2 V to 5.5 V	-	±2	-	±10	μA
I_{CC}	supply current	A port; V_I = 0 V or V_{CCI}; I_O = 0 A [1]					
		$V_{CC(A)}$, $V_{CC(B)}$ = 1.2 V to 5.5 V	-	8	-	8	μA
		$V_{CC(A)}$, $V_{CC(B)}$ = 1.65 V to 5.5 V	-	3	-	3	μA
		$V_{CC(A)}$ = 5.5 V; $V_{CC(B)}$ = 0 V	-	2	-	2	μA
		$V_{CC(A)}$ = 0 V; $V_{CC(B)}$ = 5.5 V	-2	-	-2	-	μA
		B port; V_I = 0 V or V_{CCI}; I_O = 0 A					
		$V_{CC(A)}$, $V_{CC(B)}$ = 1.2 V to 5.5 V	-	8	-	8	μA
		$V_{CC(A)}$, $V_{CC(B)}$ = 1.65 V to 5.5 V	-	3	-	3	μA
		$V_{CC(B)}$ = 0 V; $V_{CC(A)}$ = 5.5 V	-2	-	-2	-	μA
		$V_{CC(B)}$ = 5.5 V; $V_{CC(A)}$ = 0 V	-	2	-	2	μA
		A plus B port ($I_{CC(A)}$ + $I_{CC(B)}$); I_O = 0 A; V_I = 0 V or V_{CCI}					
		$V_{CC(A)}$, $V_{CC(B)}$ = 1.2 V to 5.5 V	-	16	-	16	μA
		$V_{CC(A)}$, $V_{CC(B)}$ = 1.65 V to 5.5 V	-	4	-	4	μA
ΔI_{CC}	additional supply current	per input; $V_{CC(A)}$, $V_{CC(B)}$ = 3.0 V to 5.5 V					
		A port; A port at $V_{CC(A)}$ - 0.6 V; DIR at $V_{CC(A)}$; B port = open [4]	-	50	-	75	μA
		DIR input; DIR at $V_{CC(A)}$ - 0.6 V; A port at $V_{CC(A)}$ or GND; B port = open	-	50	-	75	μA
		B port; B port at $V_{CC(B)}$ - 0.6 V; DIR at GND; A port = open [4]	-	50	-	75	μA

[1] V_{CCI} is the supply voltage associated with the data input port.
[2] V_{CCO} is the supply voltage associated with the output port.
[3] To guarantee the node switches, an external driver must source/sink at least I_{BHLO}/I_{BHHO} when the input is in the range V_{IL} to V_{IH}.
[4] For non bus hold parts only (74LVC2T45).

All information provided in this document is subject to legal disclaimers.

© Nexperia B.V. 2018. All rights reserved

11. Dynamic characteristics

Table 9. Typical dynamic characteristics at $V_{CC(A)}$ = 1.2 V and T_{amb} = 25 °C

Voltages are referenced to GND (ground = 0 V); for test circuit see Fig. 8; for waveforms see Fig. 6 and Fig. 7.

Symbol	Parameter	Conditions		$V_{CC(B)}$						Unit
				1.2 V	1.5 V	1.8 V	2.5 V	3.3 V	5.0 V	
t_{PLH}	LOW to HIGH propagation delay	A to B		10.6	8.1	7.0	5.8	5.3	5.1	ns
		B to A		10.6	9.5	9.0	8.5	8.3	8.2	ns
t_{PHL}	HIGH to LOW propagation delay	A to B		10.1	7.1	6.0	5.3	5.2	5.4	ns
		B to A		10.1	8.6	8.1	7.8	7.6	7.6	ns
t_{PHZ}	HIGH to OFF-state propagation delay	DIR to A		9.4	9.4	9.4	9.4	9.4	9.4	ns
		DIR to B		12.0	9.4	9.0	7.8	8.4	7.9	ns
t_{PLZ}	LOW to OFF-state propagation delay	DIR to A		7.1	7.1	7.1	7.1	7.1	7.1	ns
		DIR to B		9.5	7.8	7.7	6.9	7.6	7.0	ns
t_{PZH}	OFF-state to HIGH propagation delay	DIR to A	[1]	20.1	17.3	16.7	15.4	15.9	15.2	ns
		DIR to B	[1]	17.7	15.2	14.1	12.9	12.4	12.2	ns
t_{PZL}	OFF-state to LOW propagation delay	DIR to A	[1]	22.1	18.0	17.1	15.6	16.0	15.5	ns
		DIR to B	[1]	19.5	16.5	15.4	14.7	14.6	14.8	ns

[1] t_{PZH} and t_{PZL} are calculated values using the formula shown in Section 13.4.

Table 10. Typical dynamic characteristics at $V_{CC(B)}$ = 1.2 V and T_{amb} = 25 °C

Voltages are referenced to GND (ground = 0 V); for test circuit see Fig. 8; for waveforms see Fig. 6 and Fig. 7.

Symbol	Parameter	Conditions		$V_{CC(A)}$						Unit
				1.2 V	1.5 V	1.8 V	2.5 V	3.3 V	5.0 V	
t_{PLH}	LOW to HIGH propagation delay	A to B		10.6	9.5	9.0	8.5	8.3	8.2	ns
		B to A		10.6	8.1	7.0	5.8	5.3	5.1	ns
t_{PHL}	HIGH to LOW propagation delay	A to B		10.1	8.6	8.1	7.8	7.6	7.6	ns
		B to A		10.1	7.1	6.0	5.3	5.2	5.4	ns
t_{PHZ}	HIGH to OFF-state propagation delay	DIR to A		9.4	6.5	5.7	4.1	4.1	3.0	ns
		DIR to B		12.0	6.1	5.4	4.6	4.3	4.0	ns
t_{PLZ}	LOW to OFF-state propagation delay	DIR to A		7.1	4.9	4.5	3.2	3.4	2.5	ns
		DIR to B		9.5	7.3	6.6	5.9	5.7	5.6	ns
t_{PZH}	OFF-state to HIGH propagation delay	DIR to A	[1]	20.1	15.4	13.6	11.7	11.0	10.7	ns
		DIR to B	[1]	17.7	14.4	13.5	11.7	11.7	10.7	ns
t_{PZL}	OFF-state to LOW propagation delay	DIR to A	[1]	22.1	13.2	11.4	9.9	9.5	9.4	ns
		DIR to B	[1]	19.5	15.1	13.8	11.9	11.7	10.6	ns

[1] t_{PZH} and t_{PZL} are calculated values using the formula shown in Section 13.4.

All information provided in this document is subject to legal disclaimers.

© Nexperia B.V. 2018. All rights reserved

Table 11. Typical power dissipation capacitance at $V_{CC(A)} = V_{CC(B)}$ and T_{amb} = 25 °C

Voltages are referenced to GND (ground = 0 V).

Symbol	Parameter	Conditions	$V_{CC(A)}$ and $V_{CC(B)}$				Unit
			1.8 V	2.5 V	3.3 V	5.0 V	
C_{PD}	power dissipation capacitance[1] [2]	A port: (direction A to B); B port: (direction B to A)	2	3	3	4	pF
		A port: (direction A to B); B port: (direction B to A)	15	16	16	18	pF

[1] C_{PD} is used to determine the dynamic power dissipation (P_D in μW).
$P_D = C_{PD} \times V_{CC}^2 \times f_i \times N + \Sigma(C_L \times V_{CC}^2 \times f_o)$ where:
f_i = input frequency in MHz;
f_o = output frequency in MHz;
C_L = load capacitance in pF;
V_{CC} = supply voltage in V;
N = number of inputs switching;
$\Sigma(C_L \times V_{CC}^2 \times f_o)$ = sum of the outputs.

[2] f_i = 10 MHz; V_I = GND to V_{CC}; $t_r = t_f$ = 1 ns; C_L = 0 pF; $R_L = \infty\ \Omega$.

Table 12. Dynamic characteristics for temperature range -40 °C to +85 °C

Voltages are referenced to GND (ground = 0 V); for test circuit see Fig. 8; for waveforms see Fig. 6 and Fig. 7.

Symbol	Parameter	Conditions	$V_{CC(B)}$										Unit
			1.5 V ± 0.1 V		1.8 V ± 0.15 V		2.5 V ± 0.2 V		3.3 V ± 0.3 V		5.0 V ± 0.5 V		
			Min	Max	Min	Max	Min	Max	Min	Max	Min	Max	
$V_{CC(A)}$ = 1.4 V to 1.6 V													
t_{PLH}	LOW to HIGH propagation delay	A to B	2.8	21.3	2.4	17.6	2.0	13.5	1.7	11.8	1.6	10.5	ns
		B to A	2.8	21.3	2.6	19.1	2.3	14.9	2.3	12.4	2.2	12.0	ns
t_{PHL}	HIGH to LOW propagation delay	A to B	2.6	19.3	2.2	15.3	1.8	11.8	1.7	10.9	1.7	10.8	ns
		B to A	2.6	19.3	2.4	17.3	2.3	13.2	2.2	11.3	2.3	11.0	ns
t_{PHZ}	HIGH to OFF-state propagation delay	DIR to A	3.0	18.7	3.0	18.7	3.0	18.7	3.0	18.7	3.0	18.7	ns
		DIR to B	3.5	24.8	3.5	23.6	3.0	11.0	3.3	11.3	2.8	10.3	ns
t_{PLZ}	LOW to OFF-state propagation delay	DIR to A	2.4	11.4	2.4	11.4	2.4	11.4	2.4	11.4	2.4	11.4	ns
		DIR to B	2.8	18.3	3.0	17.2	2.5	9.4	3.0	10.1	2.5	9.4	ns
t_{PZH}	OFF-state to HIGH propagation delay	DIR to A [1]	-	39.6	-	36.3	-	24.3	-	22.5	-	21.4	ns
		DIR to B [1]	-	32.7	-	29.0	-	24.9	-	23.2	-	21.9	ns
t_{PZL}	OFF-state to LOW propagation delay	DIR to A [1]	-	44.1	-	40.9	-	24.2	-	22.6	-	21.3	ns
		DIR to B [1]	-	38.0	-	34.0	-	30.5	-	29.6	-	29.5	ns

All information provided in this document is subject to legal disclaimers.

© Nexperia B.V. 2018. All rights reserved

Symbol	Parameter	Conditions	$V_{CC(B)}$										Unit
			1.5 V ± 0.1 V		1.8 V ± 0.15 V		2.5 V ± 0.2 V		3.3 V ± 0.3 V		5.0 V ± 0.5 V		
			Min	Max	Min	Max	Min	Max	Min	Max	Min	Max	
$V_{CC(A)}$ = 1.65 V to 1.95 V													
t_{PLH}	LOW to HIGH propagation delay	A to B	2.6	19.1	2.2	17.7	2.2	9.3	1.7	7.2	1.4	6.8	ns
		B to A	2.4	17.6	2.2	17.7	2.3	16.0	2.1	15.5	1.9	15.1	ns
t_{PHL}	HIGH to LOW propagation delay	A to B	2.4	17.3	2.0	14.3	1.6	8.5	1.8	7.1	1.7	7.0	ns
		B to A	2.2	15.3	2.0	14.3	2.1	12.9	2.0	12.6	1.8	12.2	ns
t_{PHZ}	HIGH to OFF-state propagation delay	DIR to A	2.9	17.1	2.9	17.1	2.9	17.1	2.9	17.1	2.9	17.1	ns
		DIR to B	3.2	24.1	3.2	21.9	2.7	11.5	3.0	10.3	2.5	8.2	ns
t_{PLZ}	LOW to OFF-state propagation delay	DIR to A	2.4	10.5	2.4	10.5	2.4	10.5	2.4	10.5	2.4	10.5	ns
		DIR to B	2.5	17.6	2.6	16.0	2.2	9.2	2.7	8.4	2.4	7.1	ns
t_{PZH}	OFF-state to HIGH propagation delay	DIR to A [1]	-	35.2	-	33.7	-	25.2	-	23.9	-	22.2	ns
		DIR to B [1]	-	29.6	-	28.2	-	19.8	-	17.7	-	17.3	ns
t_{PZL}	OFF-state to LOW propagation delay	DIR to A [1]	-	39.4	-	36.2	-	24.4	-	22.9	-	20.4	ns
		DIR to B [1]	-	34.4	-	31.4	-	25.6	-	24.2	-	24.1	ns
$V_{CC(A)}$ = 2.3 V to 2.7 V													
t_{PLH}	LOW to HIGH propagation delay	A to B	2.3	17.9	2.3	16.0	1.5	8.5	1.3	6.2	1.1	4.8	ns
		B to A	2.0	13.5	2.2	9.3	1.5	8.5	1.4	8.0	1.0	7.5	ns
t_{PHL}	HIGH to LOW propagation delay	A to B	2.3	15.8	2.1	12.9	1.4	7.5	1.3	5.4	0.9	4.6	ns
		B to A	1.8	11.8	1.9	8.5	1.4	7.5	1.3	7.0	0.9	6.2	ns
t_{PHZ}	HIGH to OFF-state propagation delay	DIR to A	2.1	8.1	2.1	8.1	2.1	8.1	2.1	8.1	2.1	8.1	ns
		DIR to B	3.0	22.5	3.0	21.4	2.5	11.0	2.8	9.3	2.3	6.9	ns
t_{PLZ}	LOW to OFF-state propagation delay	DIR to A	1.7	5.8	1.7	5.8	1.7	5.8	1.7	5.8	1.7	5.8	ns
		DIR to B	2.3	14.6	2.5	13.2	2.0	9.0	2.5	8.4	1.8	5.8	ns
t_{PZH}	OFF-state to HIGH propagation delay	DIR to A [1]	-	28.1	-	22.5	-	17.5	-	16.4	-	13.3	ns
		DIR to B [1]	-	23.7	-	21.8	-	14.3	-	12.0	-	10.6	ns
t_{PZL}	OFF-state to LOW propagation delay	DIR to A [1]	-	34.3	-	29.9	-	18.5	-	16.3	-	13.1	ns
		DIR to B [1]	-	23.9	-	21.0	-	15.6	-	13.5	-	12.7	ns
$V_{CC(A)}$ = 3.0 V to 3.6 V													
t_{PLH}	LOW to HIGH propagation delay	A to B	2.3	17.1	2.1	15.5	1.4	8.0	0.8	5.6	0.7	4.4	ns
		B to A	1.7	11.8	1.7	7.2	1.3	6.2	0.7	5.6	0.6	5.4	ns
t_{PHL}	HIGH to LOW propagation delay	A to B	2.2	15.6	2.0	12.6	1.3	7.0	0.8	5.0	0.7	4.0	ns
		B to A	1.7	10.9	1.8	7.1	1.3	5.4	0.8	5.0	0.7	4.5	ns
t_{PHZ}	HIGH to OFF-state propagation delay	DIR to A	2.3	7.3	2.3	7.3	2.3	7.3	2.3	7.3	2.7	7.3	ns
		DIR to B	2.9	18.0	2.9	16.5	2.3	10.1	2.7	8.6	2.2	6.3	ns
t_{PLZ}	LOW to OFF-state propagation delay	DIR to A	2.0	5.6	2.0	5.6	2.0	5.6	2.0	5.6	2.0	5.6	ns
		DIR to B	2.3	13.6	2.4	12.5	1.9	7.8	2.3	7.1	1.7	4.9	ns
t_{PZH}	OFF-state to HIGH propagation delay	DIR to A [1]	-	25.4	-	19.7	-	14.0	-	12.7	-	10.3	ns
		DIR to B [1]	-	22.7	-	21.1	-	13.6	-	11.2	-	10.0	ns
t_{PZL}	OFF-state to LOW propagation delay	DIR to A [1]	-	28.9	-	23.6	-	15.5	-	13.6	-	10.8	ns
		DIR to B [1]	-	22.9	-	19.9	-	14.3	-	12.3	-	11.3	ns

All information provided in this document is subject to legal disclaimers.

© Nexperia B.V. 2018. All rights reserved

Symbol	Parameter	Conditions	$V_{CC(B)}$										Unit
			1.5 V ± 0.1 V		1.8 V ± 0.15 V		2.5 V ± 0.2 V		3.3 V ± 0.3 V		5.0 V ± 0.5 V		
			Min	Max	Min	Max	Min	Max	Min	Max	Min	Max	
$V_{CC(A)}$ = 4.5 V to 5.5 V													
t_{PLH}	LOW to HIGH propagation delay	A to B	2.2	16.6	1.9	15.1	1.0	7.5	0.7	5.4	0.5	3.9	ns
		B to A	1.6	10.5	1.4	6.8	1.0	4.8	0.7	4.4	0.5	3.9	ns
t_{PHL}	HIGH to LOW propagation delay	A to B	2.3	15.3	1.8	12.2	1.0	6.2	0.7	4.5	0.5	3.5	ns
		B to A	1.7	10.8	1.7	7.0	0.9	4.6	0.7	4.0	0.5	3.5	ns
t_{PHZ}	HIGH to OFF-state propagation delay	DIR to A	1.7	5.4	1.7	5.4	1.7	5.4	1.7	5.4	1.7	5.4	ns
		DIR to B	2.9	17.3	2.9	16.1	2.3	9.7	2.7	8.0	2.5	5.7	ns
t_{PLZ}	LOW to OFF-state propagation delay	DIR to A	1.4	3.7	1.4	3.7	1.3	3.7	1.0	3.7	0.9	3.7	ns
		DIR to B	2.3	13.1	2.4	12.1	1.9	7.4	2.3	7.0	1.8	4.5	ns
t_{PZH}	OFF-state to HIGH propagation delay	DIR to A [1]	-	23.6	-	18.9	-	12.2	-	11.4	-	8.4	ns
		DIR to B [1]	-	20.3	-	18.8	-	11.2	-	9.1	-	7.6	ns
t_{PZL}	OFF-state to LOW propagation delay	DIR to A [1]	-	28.1	-	23.1	-	14.3	-	12.0	-	9.2	ns
		DIR to B [1]	-	20.7	-	17.6	-	11.6	-	9.9	-	8.9	ns

[1] t_{PZH} and t_{PZL} are calculated values using the formula shown in Section 13.4.

Table 13. Dynamic characteristics for temperature range -40 °C to +125 °C

Voltages are referenced to GND (ground = 0 V); for test circuit see Fig. 8; for waveforms see Fig. 6 and Fig. 7.

Symbol	Parameter	Conditions	$V_{CC(B)}$										Unit
			1.5 V ± 0.1 V		1.8 V ± 0.15 V		2.5 V ± 0.2 V		3.3 V ± 0.3 V		5.0 V ± 0.5 V		
			Min	Max	Min	Max	Min	Max	Min	Max	Min	Max	
$V_{CC(A)}$ = 1.4 V to 1.6 V													
t_{PLH}	LOW to HIGH propagation delay	A to B	2.5	23.5	2.1	19.4	1.8	14.9	1.5	13.0	1.4	11.6	ns
		B to A	2.5	23.5	2.3	21.1	2.0	16.4	2.0	13.7	1.9	13.2	ns
t_{PHL}	HIGH to LOW propagation delay	A to B	2.3	21.3	1.9	16.9	1.6	13.0	1.5	12.0	1.5	11.9	ns
		B to A	2.3	21.3	2.1	19.1	2.0	14.6	1.9	12.5	2.0	12.1	ns
t_{PHZ}	HIGH to OFF-state propagation delay	DIR to A	2.7	20.6	2.7	20.6	2.7	20.6	2.7	20.6	2.7	20.6	ns
		DIR to B	3.1	27.3	3.1	26.0	2.7	12.1	2.9	12.5	2.5	11.4	ns
t_{PLZ}	LOW to OFF-state propagation delay	DIR to A	2.1	12.6	2.1	12.6	2.1	12.6	2.1	12.6	2.1	12.6	ns
		DIR to B	2.5	20.2	2.7	19.0	2.2	10.4	2.7	11.2	2.2	10.4	ns
t_{PZH}	OFF-state to HIGH propagation delay	DIR to A [1]	-	43.7	-	40.1	-	26.8	-	24.9	-	23.6	ns
		DIR to B [1]	-	36.1	-	32.0	-	27.5	-	25.6	-	24.2	ns
t_{PZL}	OFF-state to LOW propagation delay	DIR to A [1]	-	48.6	-	45.1	-	26.7	-	25.0	-	23.5	ns
		DIR to B [1]	-	41.9	-	37.5	-	33.6	-	32.6	-	32.5	ns

All information provided in this document is subject to legal disclaimers.

© Nexperia B.V. 2018. All rights reserved

Symbol	Parameter	Conditions	$V_{CC(B)}$										Unit
			1.5 V ± 0.1 V		1.8 V ± 0.15 V		2.5 V ± 0.2 V		3.3 V ± 0.3 V		5.0 V ± 0.5 V		
			Min	Max	Min	Max	Min	Max	Min	Max	Min	Max	
$V_{CC(A)}$ = 1.65 V to 1.95 V													
t_{PLH}	LOW to HIGH propagation delay	A to B	2.3	21.1	1.9	19.5	1.9	10.3	1.5	8.0	1.2	7.5	ns
		B to A	2.1	19.4	1.9	19.5	2.0	17.6	1.8	17.1	1.7	16.7	ns
t_{PHL}	HIGH to LOW propagation delay	A to B	2.1	19.1	1.8	15.8	1.4	9.4	1.6	7.9	1.5	7.7	ns
		B to A	1.9	16.9	1.8	15.8	1.8	14.2	1.8	13.9	1.6	13.5	ns
t_{PHZ}	HIGH to OFF-state propagation delay	DIR to A	2.6	18.9	2.6	18.9	2.6	18.9	2.6	18.9	2.6	18.9	ns
		DIR to B	2.8	26.6	2.8	24.1	2.4	12.7	2.7	11.4	2.2	9.1	ns
t_{PLZ}	LOW to OFF-state propagation delay	DIR to A	2.1	11.6	2.1	11.6	2.1	11.6	2.1	11.6	2.1	11.6	ns
		DIR to B	2.2	19.4	2.3	17.6	1.9	10.2	2.4	9.3	2.1	7.9	ns
t_{PZH}	OFF-state to HIGH propagation delay	DIR to A [1]	-	38.8	-	37.1	-	27.8	-	26.4	-	24.6	ns
		DIR to B [1]	-	32.7	-	31.1	-	21.9	-	19.6	-	19.1	ns
t_{PZL}	OFF-state to LOW propagation delay	DIR to A [1]	-	43.5	-	39.9	-	26.9	-	25.3	-	22.6	ns
		DIR to B [1]	-	38.0	-	34.7	-	28.3	-	26.8	-	26.6	ns
$V_{CC(A)}$ = 2.3 V to 2.7 V													
t_{PLH}	LOW to HIGH propagation delay	A to B	2.0	19.7	2.0	17.6	1.3	9.4	1.1	6.9	0.9	5.3	ns
		B to A	1.8	14.9	1.9	10.3	1.3	9.4	1.2	8.8	0.9	8.3	ns
t_{PHL}	HIGH to LOW propagation delay	A to B	2.0	17.4	1.8	14.2	1.2	8.3	1.1	6.0	0.8	5.1	ns
		B to A	1.6	13.0	1.7	9.4	1.2	8.3	1.1	7.7	0.8	6.9	ns
t_{PHZ}	HIGH to OFF-state propagation delay	DIR to A	1.8	9.0	1.8	9.0	1.8	9.0	1.8	9.0	1.8	9.0	ns
		DIR to B	2.7	24.8	2.7	23.6	2.2	12.1	2.5	10.3	2.0	7.6	ns
t_{PLZ}	LOW to OFF-state propagation delay	DIR to A	1.5	6.4	1.5	6.4	1.5	6.4	1.5	6.4	1.5	6.4	ns
		DIR to B	2.0	16.1	2.2	14.6	1.8	9.9	2.2	9.3	1.6	6.4	ns
t_{PZH}	OFF-state to HIGH propagation delay	DIR to A [1]	-	31.0	-	24.9	-	19.3	-	18.1	-	14.7	ns
		DIR to B [1]	-	26.1	-	24.0	-	15.8	-	13.3	-	11.7	ns
t_{PZL}	OFF-state to LOW propagation delay	DIR to A [1]	-	37.8	-	33.0	-	20.4	-	18.0	-	14.5	ns
		DIR to B [1]	-	26.4	-	23.2	-	17.3	-	15.0	-	14.1	ns
$V_{CC(A)}$ = 3.0 V to 3.6 V													
t_{PLH}	LOW to HIGH propagation delay	A to B	2.0	18.9	1.8	17.1	1.2	8.8	0.7	6.2	0.6	4.9	ns
		B to A	1.5	13.0	1.5	8.0	1.1	6.9	0.6	6.2	0.5	6.0	ns
t_{PHL}	HIGH to LOW propagation delay	A to B	1.9	17.2	1.8	13.9	1.1	7.7	0.7	5.5	0.6	4.4	ns
		B to A	1.5	12.0	1.6	7.9	1.1	6.0	0.7	5.5	0.6	5.0	ns
t_{PHZ}	HIGH to OFF-state propagation delay	DIR to A	2.0	8.1	2.0	8.1	2.0	8.1	2.0	8.1	2.4	8.1	ns
		DIR to B	2.6	19.8	2.6	18.2	2.0	11.2	2.4	9.5	1.9	7.0	ns
t_{PLZ}	LOW to OFF-state propagation delay	DIR to A	1.8	6.2	1.8	6.2	1.8	6.2	1.8	6.2	1.8	6.2	ns
		DIR to B	2.0	15.0	2.1	13.8	1.7	8.6	2.0	7.9	1.5	5.4	ns
t_{PZH}	OFF-state to HIGH propagation delay	DIR to A [1]	-	28.0	-	21.8	-	15.5	-	14.1	-	11.4	ns
		DIR to B [1]	-	25.1	-	23.3	-	15.0	-	12.4	-	11.1	ns
t_{PZL}	OFF-state to LOW propagation delay	DIR to A [1]	-	31.8	-	26.1	-	17.2	-	15.0	-	12.0	ns
		DIR to B [1]	-	25.3	-	22.0	-	15.8	-	13.6	-	12.5	ns

All information provided in this document is subject to legal disclaimers.

© Nexperia B.V. 2018. All rights reserved

Symbol	Parameter	Conditions	$V_{CC(B)}$										Unit
			1.5 V ± 0.1 V		1.8 V ± 0.15 V		2.5 V ± 0.2 V		3.3 V ± 0.3 V		5.0 V ± 0.5 V		
			Min	Max	Min	Max	Min	Max	Min	Max	Min	Max	
$V_{CC(A)}$ = 4.5 V to 5.5 V													
t_{PLH}	LOW to HIGH propagation delay	A to B	1.9	18.3	1.7	16.7	0.9	8.3	0.6	6.0	0.4	4.3	ns
		B to A	1.4	11.6	1.2	7.5	0.9	5.3	0.6	4.9	0.4	4.3	ns
t_{PHL}	HIGH to LOW propagation delay	A to B	2.0	16.9	1.6	13.5	0.9	6.9	0.6	5.0	0.4	3.9	ns
		B to A	1.5	11.9	1.5	7.7	0.8	5.1	0.6	4.4	0.4	3.9	ns
t_{PHZ}	HIGH to OFF-state propagation delay	DIR to A	1.5	6.0	1.5	6.0	1.5	6.0	1.5	6.0	1.5	6.0	ns
		DIR to B	2.6	19.1	2.6	17.8	2.0	10.7	2.4	8.8	2.2	6.3	ns
t_{PLZ}	LOW to OFF-state propagation delay	DIR to A	1.2	4.1	1.2	4.1	1.1	4.1	0.9	4.1	0.8	4.1	ns
		DIR to B	2.0	14.5	2.1	13.4	1.7	8.2	2.0	7.7	1.6	5.0	ns
t_{PZH}	OFF-state to HIGH propagation delay	DIR to A [1]	-	26.1	-	20.9	-	13.5	-	12.6	-	9.3	ns
		DIR to B [1]	-	22.4	-	20.8	-	12.4	-	10.1	-	8.4	ns
t_{PZL}	OFF-state to LOW propagation delay	DIR to A [1]	-	31.0	-	25.5	-	15.8	-	13.2	-	10.2	ns
		DIR to B [1]	-	22.9	-	19.5	-	12.9	-	11.0	-	9.9	ns

[1] t_{PZH} and t_{PZL} are calculated values using the formula shown in Section 13.4.

All information provided in this document is subject to legal disclaimers.

© Nexperia B.V. 2018. All rights reserved

11.1. Waveforms and test circuit

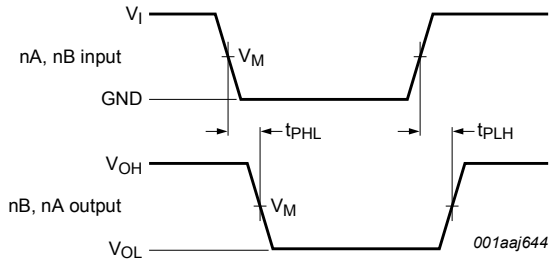

Measurement points are given in Table 14.

V_{OL} and V_{OH} are typical output voltage levels that occur with the output load.

Fig. 6. The data input (A, B) to output (B, A) propagation delay times

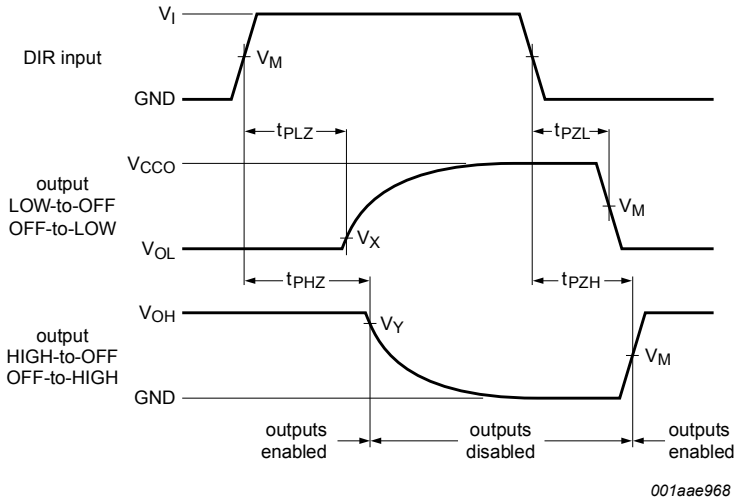

Measurement points are given in Table 14.

V_{OL} and V_{OH} are typical output voltage levels that occur with the output load.

Fig. 7. Enable and disable times

Table 14. Measurement points

Supply voltage	Input [1]	Output [2]		
$V_{CC(A)}$, $V_{CC(B)}$	V_M	V_M	V_X	V_Y
1.2 V to 1.6 V	$0.5V_{CCI}$	$0.5V_{CCO}$	V_{OL} + 0.1 V	V_{OH} - 0.1 V
1.65 V to 2.7 V	$0.5V_{CCI}$	$0.5V_{CCO}$	V_{OL} + 0.15 V	V_{OH} - 0.15 V
3.0 V to 5.5 V	$0.5V_{CCI}$	$0.5V_{CCO}$	V_{OL} + 0.3 V	V_{OH} - 0.3 V

[1] V_{CCI} is the supply voltage associated with the data input port.
[2] V_{CCO} is the supply voltage associated with the output port.

All information provided in this document is subject to legal disclaimers.

© Nexperia B.V. 2018. All rights reserved

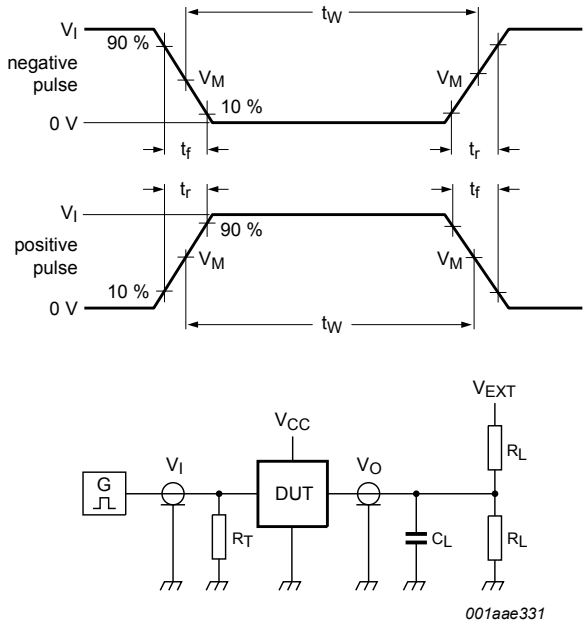

Test data is given in Table 15.

R_L = Load resistance.

C_L = Load capacitance including jig and probe capacitance.

R_T = Termination resistance.

V_{EXT} = External voltage for measuring switching times.

Fig. 8. Test circuit for measuring switching times

Table 15. Test data

Supply voltage	Input		Load		V_{EXT}		
$V_{CC(A)}$, $V_{CC(B)}$	V_I [1]	Δt/ΔV [2]	C_L	R_L	t_{PLH}, t_{PHL}	t_{PZH}, t_{PHZ}	t_{PZL}, t_{PLZ} [3]
1.2 V to 5.5 V	V_{CCI}	≤ 1.0 ns/V	15 pF	2 kΩ	open	GND	$2V_{CCO}$

[1] V_{CCI} is the supply voltage associated with the data input port.
[2] dV/dt ≥ 1.0 V/ns.
[3] V_{CCO} is the supply voltage associated with the output port.

All information provided in this document is subject to legal disclaimers.

© Nexperia B.V. 2018. All rights reserved

12. Typical propagation delay characteristics

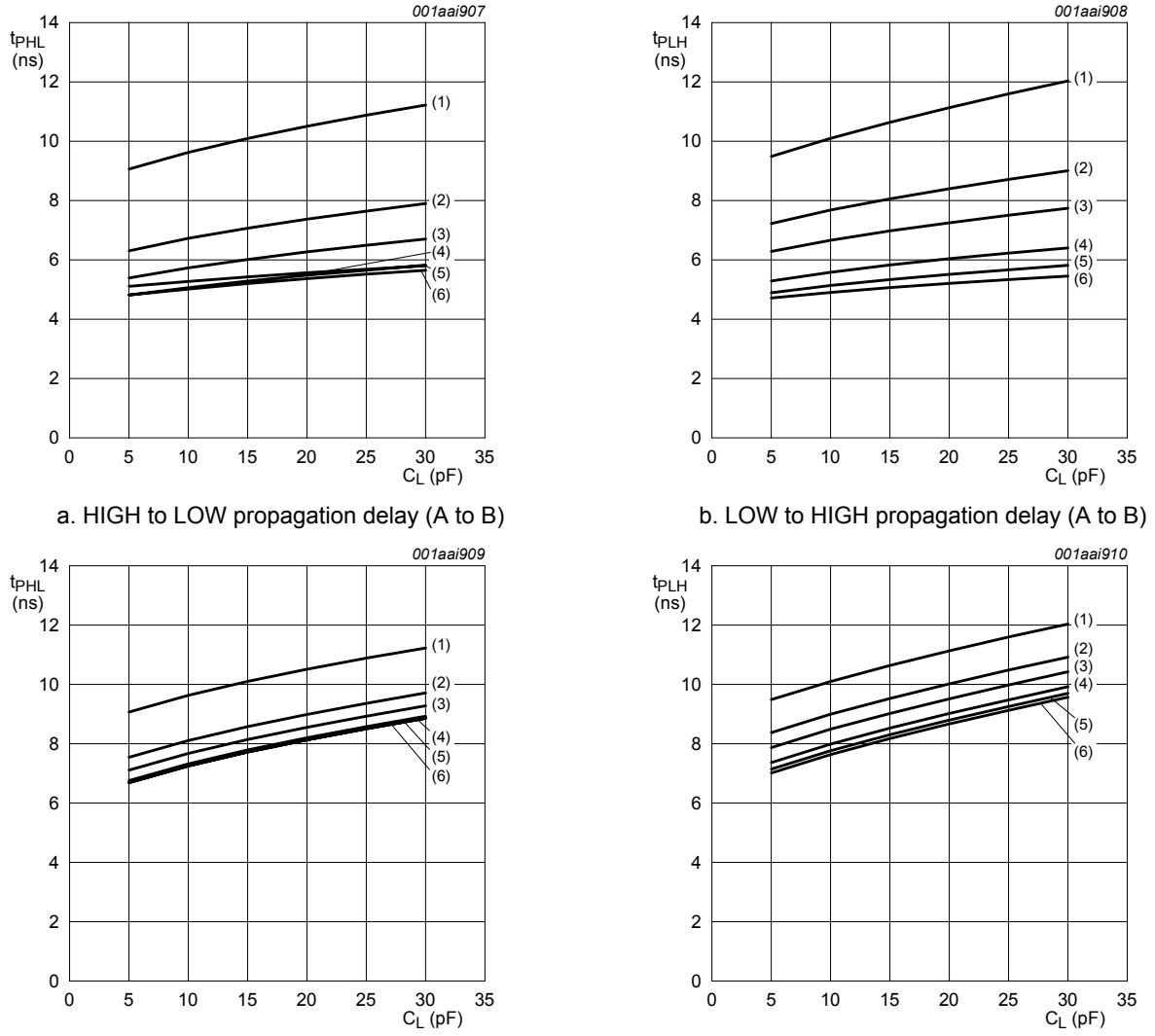

a. HIGH to LOW propagation delay (A to B)

b. LOW to HIGH propagation delay (A to B)

c. HIGH to LOW propagation delay (B to A)

d. LOW to HIGH propagation delay (B to A)

(1) $V_{CC(B)}$ = 1.2 V.
(2) $V_{CC(B)}$ = 1.5 V.
(3) $V_{CC(B)}$ = 1.8 V.
(4) $V_{CC(B)}$ = 2.5 V.
(5) $V_{CC(B)}$ = 3.3 V.
(6) $V_{CC(B)}$ = 5.0 V.

Fig. 9. Typical propagation delay versus load capacitance; T_{amb} = 25 °C; $V_{CC(A)}$ = 1.2 V

All information provided in this document is subject to legal disclaimers.

© Nexperia B.V. 2018. All rights reserved

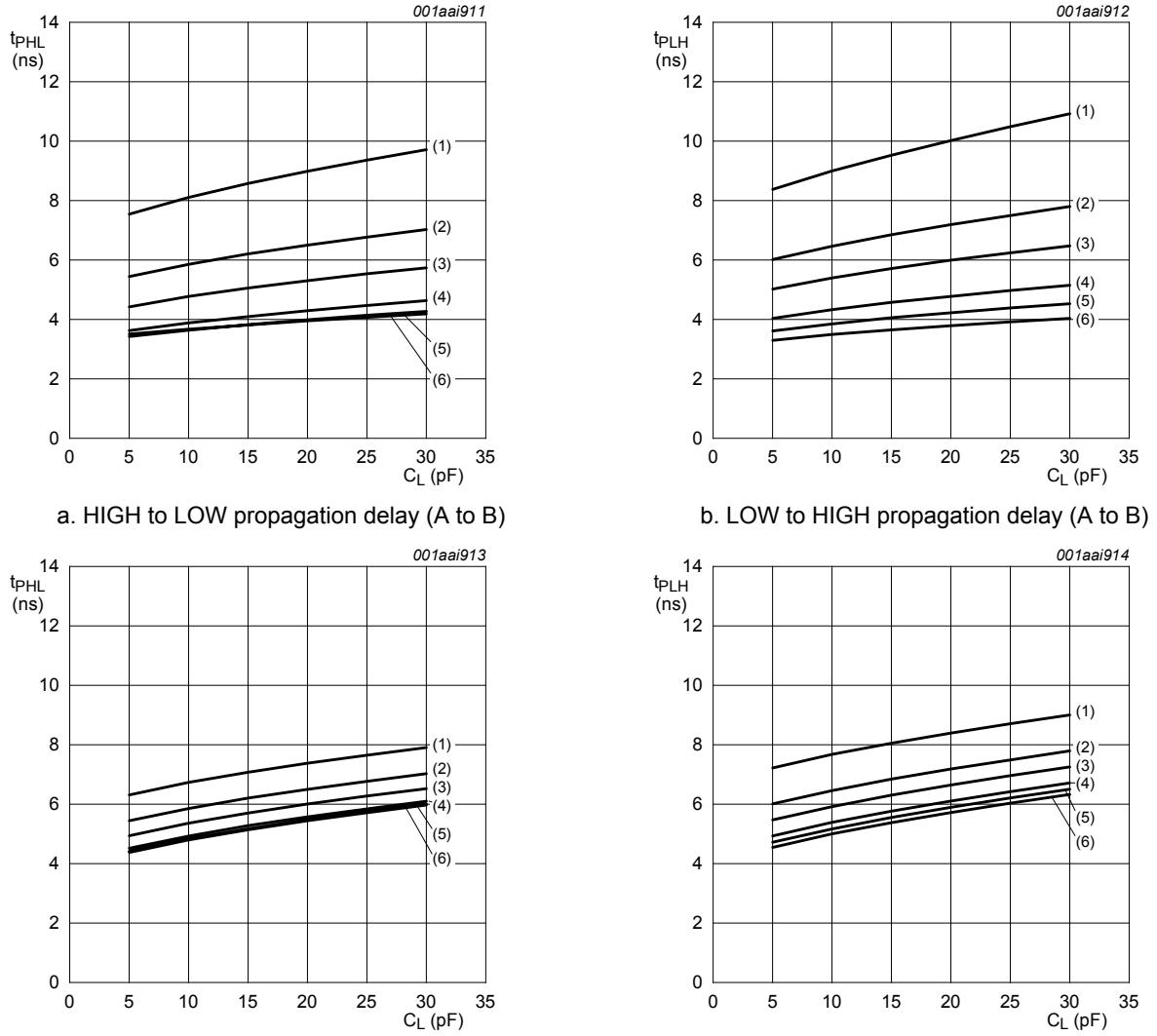

a. HIGH to LOW propagation delay (A to B)

b. LOW to HIGH propagation delay (A to B)

c. HIGH to LOW propagation delay (B to A)

d. LOW to HIGH propagation delay (B to A)

(1) $V_{CC(B)}$ = 1.2 V.
(2) $V_{CC(B)}$ = 1.5 V.
(3) $V_{CC(B)}$ = 1.8 V.
(4) $V_{CC(B)}$ = 2.5 V.
(5) $V_{CC(B)}$ = 3.3 V.
(6) $V_{CC(B)}$ = 5.0 V.

Fig. 10. Typical propagation delay versus load capacitance; T_{amb} = 25 °C; $V_{CC(A)}$ = 1.5 V

All information provided in this document is subject to legal disclaimers.

© Nexperia B.V. 2018. All rights reserved

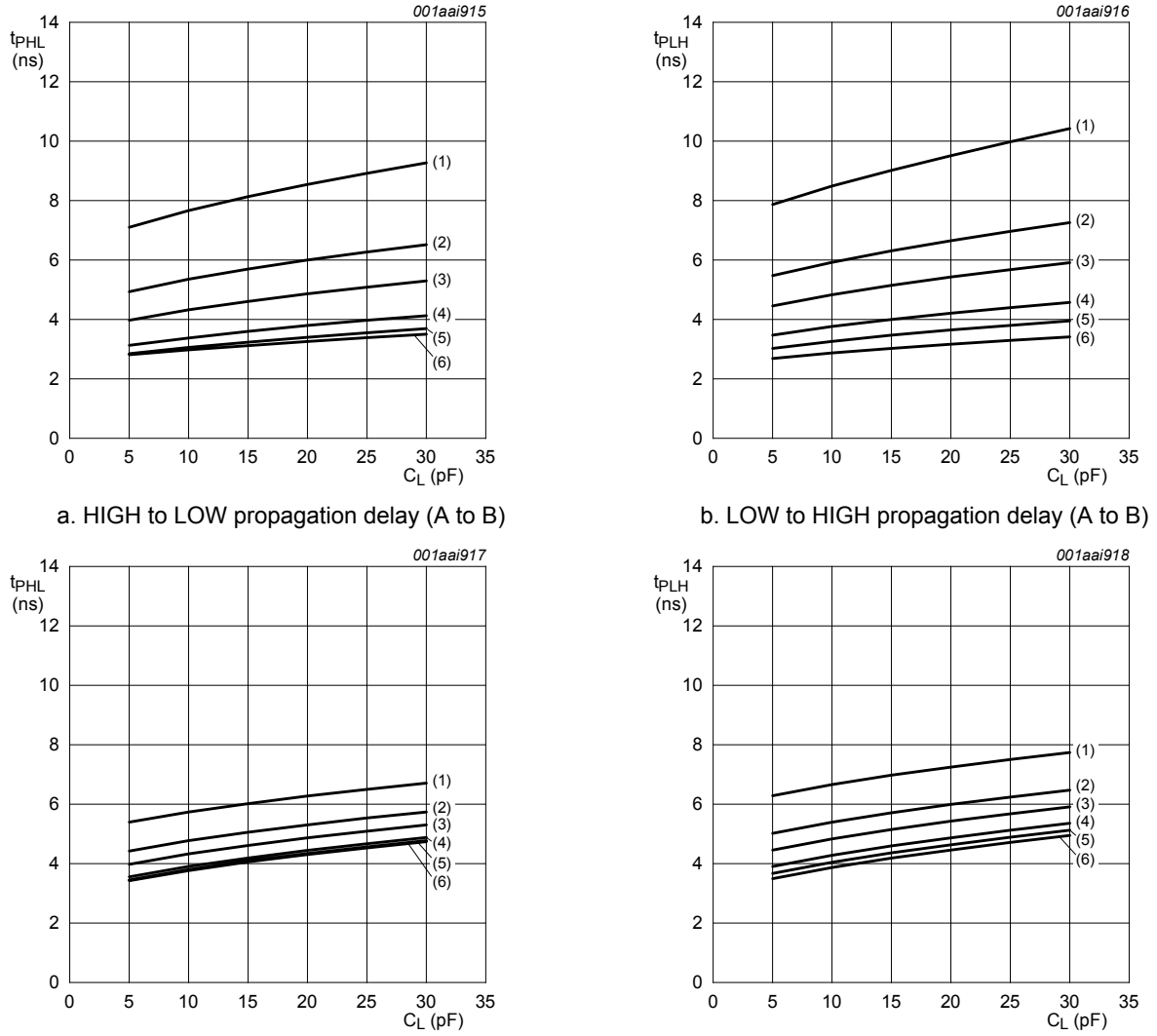

a. HIGH to LOW propagation delay (A to B)

b. LOW to HIGH propagation delay (A to B)

c. HIGH to LOW propagation delay (B to A)

d. LOW to HIGH propagation delay (B to A)

(1) $V_{CC(B)}$ = 1.2 V.
(2) $V_{CC(B)}$ = 1.5 V.
(3) $V_{CC(B)}$ = 1.8 V.
(4) $V_{CC(B)}$ = 2.5 V.
(5) $V_{CC(B)}$ = 3.3 V.
(6) $V_{CC(B)}$ = 5.0 V.

Fig. 11. Typical propagation delay versus load capacitance; T_{amb} = 25 °C; $V_{CC(A)}$ = 1.8 V

All information provided in this document is subject to legal disclaimers.

© Nexperia B.V. 2018. All rights reserved

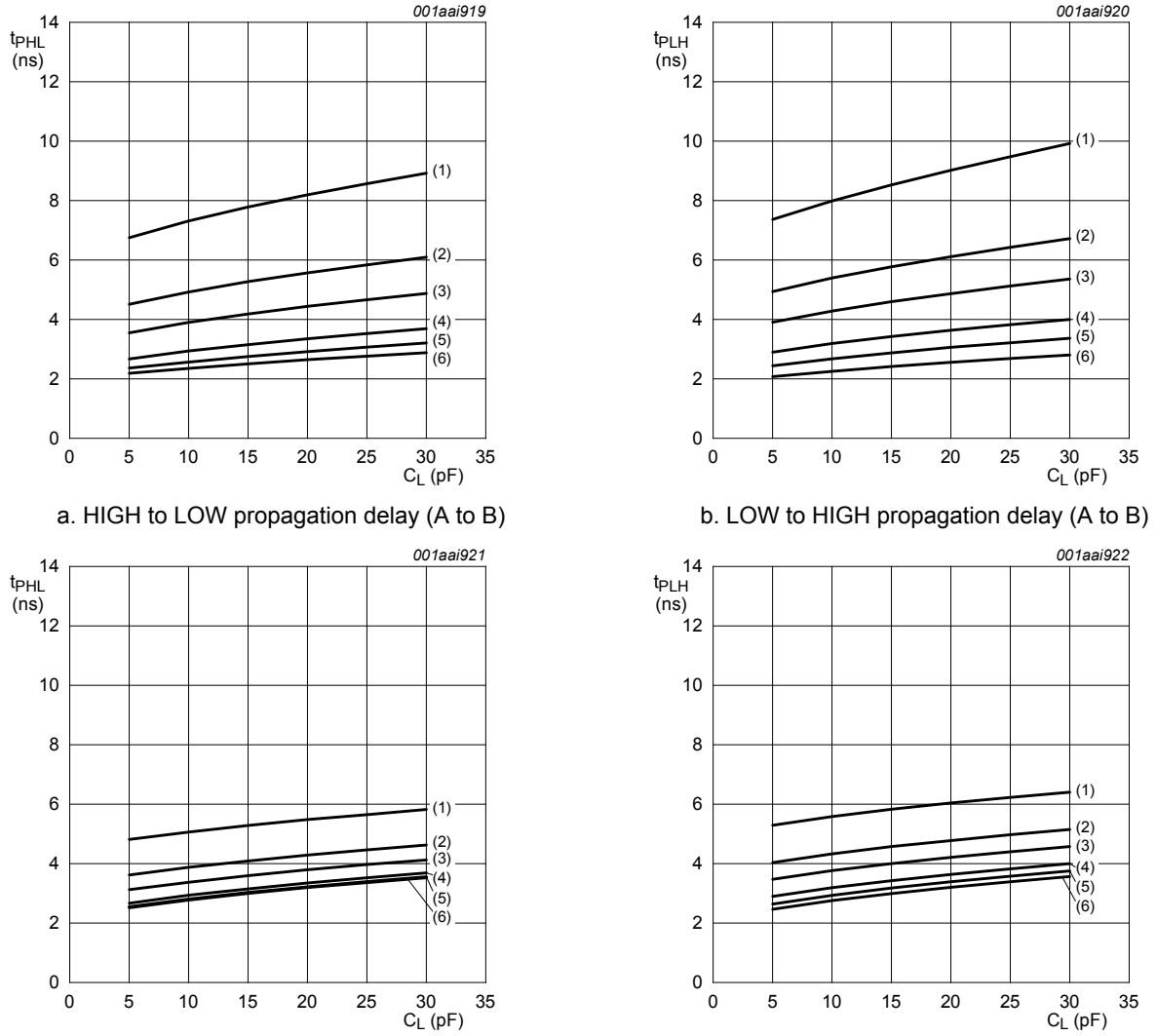

a. HIGH to LOW propagation delay (A to B)

b. LOW to HIGH propagation delay (A to B)

c. HIGH to LOW propagation delay (B to A)

d. LOW to HIGH propagation delay (B to A)

(1) $V_{CC(B)}$ = 1.2 V.
(2) $V_{CC(B)}$ = 1.5 V.
(3) $V_{CC(B)}$ = 1.8 V.
(4) $V_{CC(B)}$ = 2.5 V.
(5) $V_{CC(B)}$ = 3.3 V.
(6) $V_{CC(B)}$ = 5.0 V.

Fig. 12. Typical propagation delay versus load capacitance; T_{amb} = 25 °C; $V_{CC(A)}$ = 2.5 V

All information provided in this document is subject to legal disclaimers.

© Nexperia B.V. 2018. All rights reserved

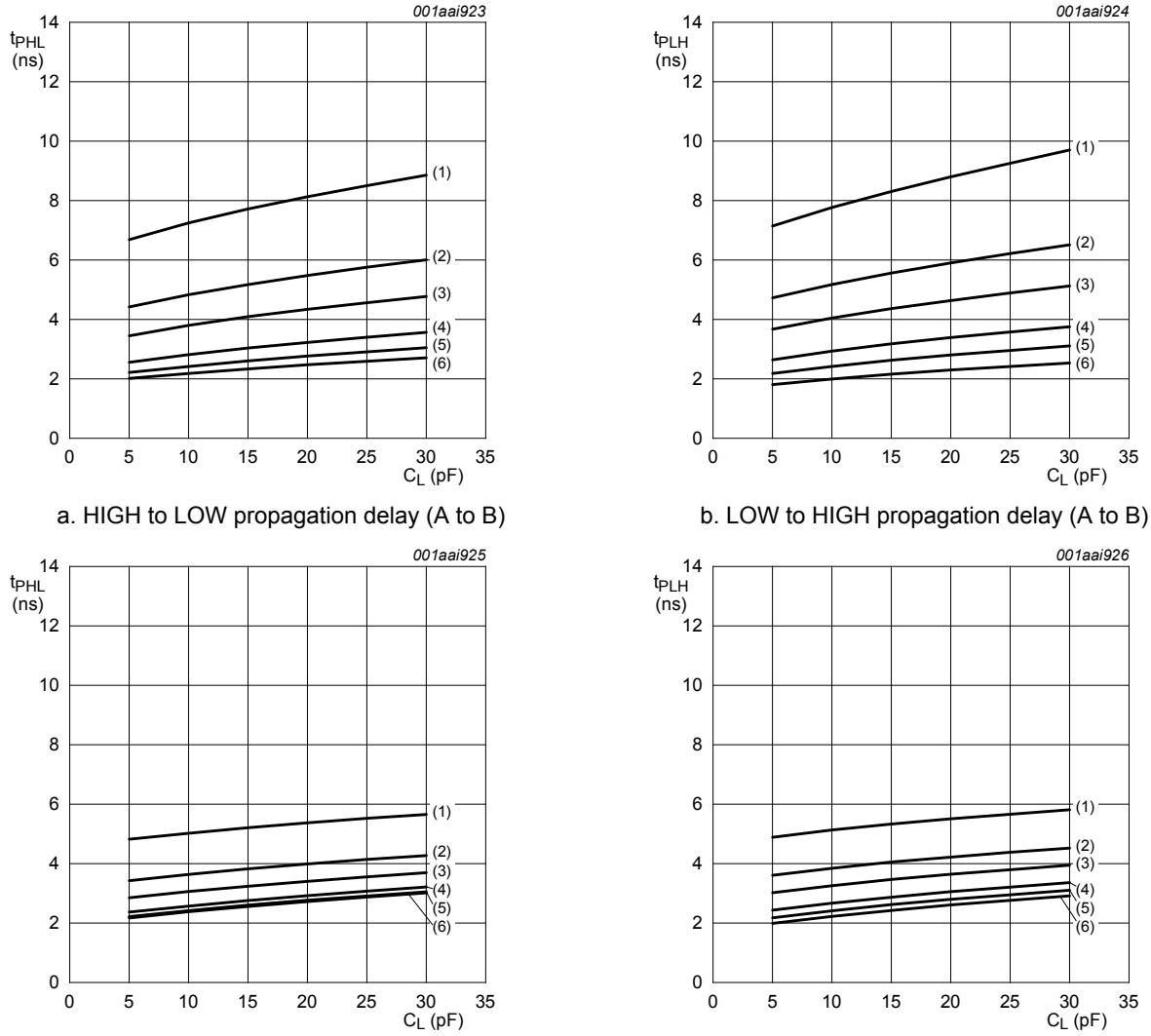

(1) $V_{CC(B)}$ = 1.2 V.
(2) $V_{CC(B)}$ = 1.5 V.
(3) $V_{CC(B)}$ = 1.8 V.
(4) $V_{CC(B)}$ = 2.5 V.
(5) $V_{CC(B)}$ = 3.3 V.
(6) $V_{CC(B)}$ = 5.0 V.

Fig. 13. Typical propagation delay versus load capacitance; T_{amb} = 25 °C; $V_{CC(A)}$ = 3.3 V

All information provided in this document is subject to legal disclaimers.

© Nexperia B.V. 2018. All rights reserved

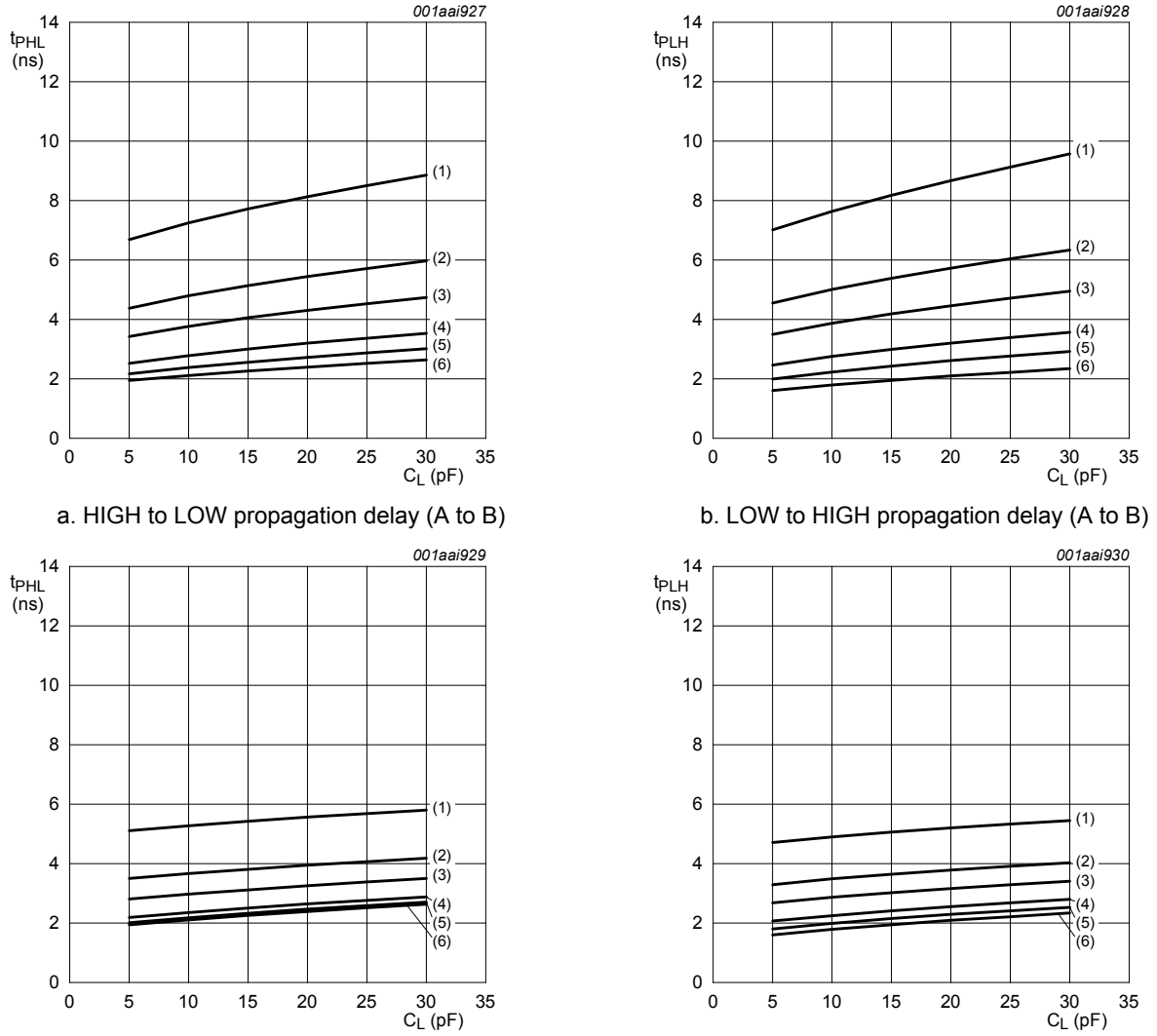

(1) $V_{CC(B)}$ = 1.2 V.
(2) $V_{CC(B)}$ = 1.5 V.
(3) $V_{CC(B)}$ = 1.8 V.
(4) $V_{CC(B)}$ = 2.5 V.
(5) $V_{CC(B)}$ = 3.3 V.
(6) $V_{CC(B)}$ = 5.0 V.

Fig. 14. Typical propagation delay versus load capacitance; T_{amb} = 25 °C; $V_{CC(A)}$ = 5.0 V

All information provided in this document is subject to legal disclaimers.

© Nexperia B.V. 2018. All rights reserved

13. Application information

13.1. Unidirectional logic level-shifting application

The circuit given in Fig. 15 is an example of the 74LVC2T45; 74LVCH2T45 being used in a unidirectional logic level-shifting application.

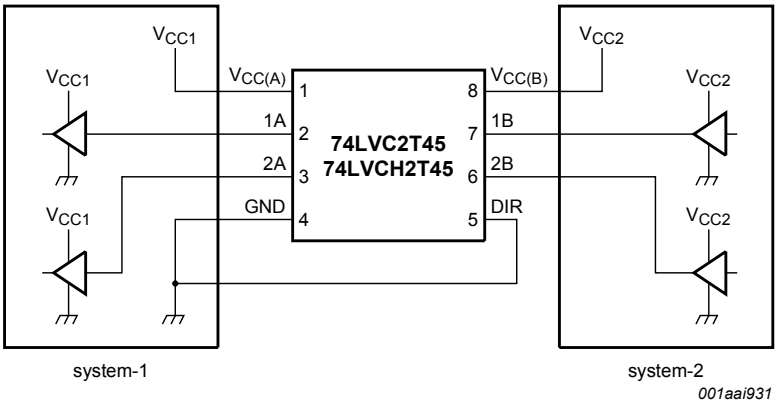

Pin numbers not applicable for SOT902-2 package.

Fig. 15. Unidirectional logic level-shifting application

Table 16. Description of unidirectional logic level-shifting application

Pin	Name	Function	Description
1	$V_{CC(A)}$	V_{CC1}	supply voltage of system-1 (1.2 V to 5.5 V)
2	1A	OUT	output level depends on V_{CC1} voltage
3	2A	OUT	output level depends on V_{CC1} voltage
4	GND	GND	device GND
5	DIR	DIR	the GND (LOW level) determines B port to A port direction
6	2B	IN	input threshold value depends on V_{CC2} voltage
7	1B	IN	input threshold value depends on V_{CC2} voltage
8	$V_{CC(B)}$	V_{CC2}	supply voltage of system-2 (1.2 V to 5.5 V)

All information provided in this document is subject to legal disclaimers.

© Nexperia B.V. 2018. All rights reserved

13.2. Bidirectional logic level-shifting application

Fig. 16 shows the 74LVC2T45; 74LVCH2T45 being used in a bidirectional logic level-shifting application. Since the device does not have an output enable pin, the system designer should take precautions to avoid bus contention between system-1 and system-2 when changing directions.

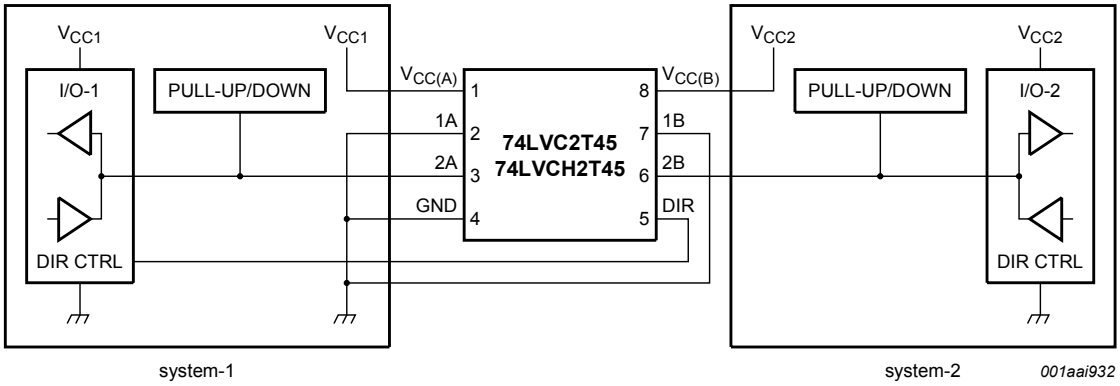

Pull-up or pull-down only needed for 74LVC2T45.

Fig. 16. Bidirectional logic level-shifting application

Table 17 gives a sequence that will illustrate data transmission from system-1 to system-2 and then from system-2 to system-1.

Table 17. Description of bidirectional logic level-shifting application

H = HIGH voltage level;

L = LOW voltage level;

Z = high-impedance OFF-state.

State	DIR CTRL	I/O-1	I/O-2	Description
1	H	output	input	system-1 data to system-2
2	H	Z	Z	system-2 is getting ready to send data to system-1. I/O-1 and I/O-2 are disabled. The bus-line state depends on bus hold
3	L	Z	Z	DIR bit is set LOW. I/O-1 and I/O-2 still are disabled. The bus-line state depends on bus hold
4	L	input	output	system-2 data to system-1

13.3. Power-up considerations

The device is designed such that no special power-up sequence is required other than GND being applied first.

Table 18. Typicaltotal supply current ($I_{CC(A)}$ + $I_{CC(B)}$)

$V_{CC(A)}$	$V_{CC(B)}$					Unit
	0 V	1.8 V	2.5 V	3.3 V	5.0 V	
0 V	0	< 1	< 1	< 1	< 1	μA
1.8 V	< 1	< 2	< 2	< 2	2	μA
2.5 V	< 1	< 2	< 2	< 2	< 2	μA
3.3 V	< 1	< 2	< 2	< 2	< 2	μA
5.0 V	< 1	2	< 2	< 2	< 2	μA

All information provided in this document is subject to legal disclaimers.

© Nexperia B.V. 2018. All rights reserved

13.4. Enable times

Calculate the enable times for the 74LVC2T45; 74LVCH2T45 using the following formulas:

- t_{PZH} (DIR to A) = t_{PLZ} (DIR to B) + t_{PLH} (B to A)
- t_{PZL} (DIR to A) = t_{PHZ} (DIR to B) + t_{PHL} (B to A)
- t_{PZH} (DIR to B) = t_{PLZ} (DIR to A) + t_{PLH} (A to B)
- t_{PZL} (DIR to B) = t_{PHZ} (DIR to A) + t_{PHL} (A to B)

In a bidirectional application, these enable times provide the maximum delay from the time the DIR bit is switched until an output is expected. For example, if the 74LVC2T45; 74LVCH2T45 initially is transmitting from A to B, then the DIR bit is switched, the B port of the device must be disabled before presenting it with an input. After the B port has been disabled, an input signal applied to it appears on the corresponding A port after the specified propagation delay.

All information provided in this document is subject to legal disclaimers.

© Nexperia B.V. 2018. All rights reserved

14. Package outline

VSSOP8: plastic very thin shrink small outline package; 8 leads; body width 2.3 mm **SOT765-1**

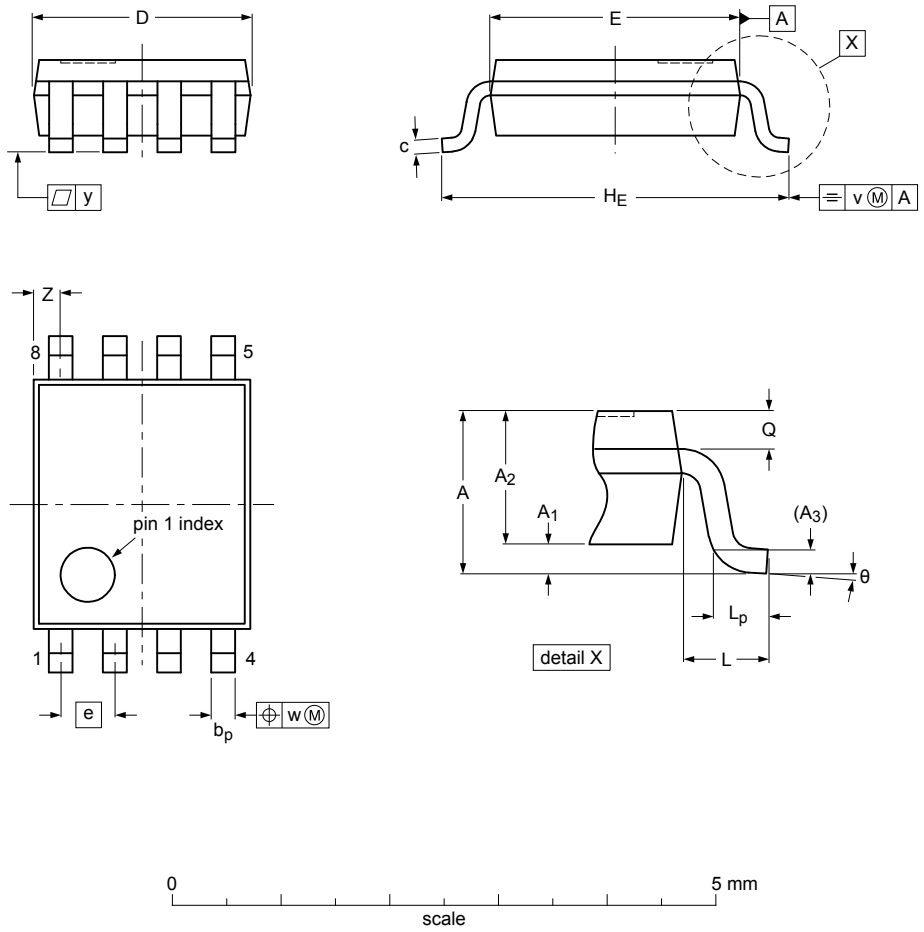

Dimensions (mm are the original dimensions)

Unit		A max.	A_1	A_2	A_3	b_p	c	$D^{(1)}$	$E^{(2)}$	e	H_E	L	L_p	Q	v	w	y	$Z^{(1)}$	θ
mm	max	1	0.15	0.85	0.12	0.27	0.23	2.1	2.4	0.5	3.2	0.4	0.40	0.21	0.2	0.08	0.1	0.4	8°
	nom																		
	min		0.00	0.60		0.17	0.08	1.9	2.2		3.0		0.15	0.19				0.1	0°

Note
1. Plastic or metal protrusions of 0.15 mm maximum per side are not included.
2. Plastic or metal protrusions of 0.25 mm maximum per side are not included.

sot765-1_po

Outline version	References				European projection	Issue date
	IEC	JEDEC	JEITA			
SOT765-1		MO-187				~~07-06-02~~ 16-05-31

Fig. 17. Package outline SOT765-1 (VSSOP8)

All information provided in this document is subject to legal disclaimers.

© Nexperia B.V. 2018. All rights reserved

XSON8: plastic extremely thin small outline package; no leads; 8 terminals; body 1 x 1.95 x 0.5 mm **SOT833-1**

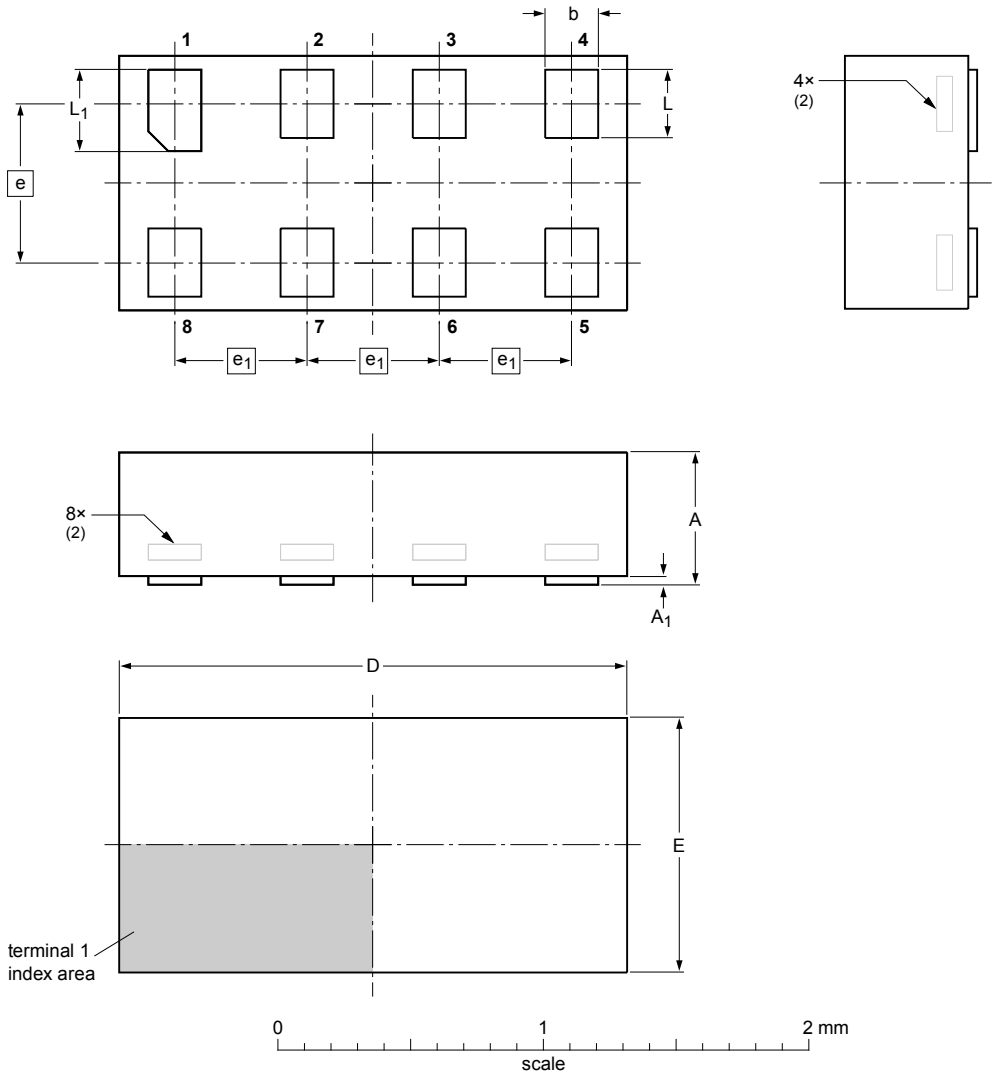

DIMENSIONS (mm are the original dimensions)

UNIT	A(1) max	A_1 max	b	D	E	e	e_1	L	L_1
mm	0.5	0.04	0.25 0.17	2.0 1.9	1.05 0.95	0.6	0.5	0.35 0.27	0.40 0.32

Notes

1. Including plating thickness.
2. Can be visible in some manufacturing processes.

OUTLINE VERSION	REFERENCES				EUROPEAN PROJECTION	ISSUE DATE
	IEC	JEDEC	JEITA			
SOT833-1	- - -	MO-252	- - -			~~07-11-14~~ 07-12-07

Fig. 18. Package outline SOT833-1 (XSON8)

All information provided in this document is subject to legal disclaimers.

© Nexperia B.V. 2018. All rights reserved

XSON8: extremely thin small outline package; no leads; 8 terminals; body 1.35 x 1 x 0.5 mm **SOT1089**

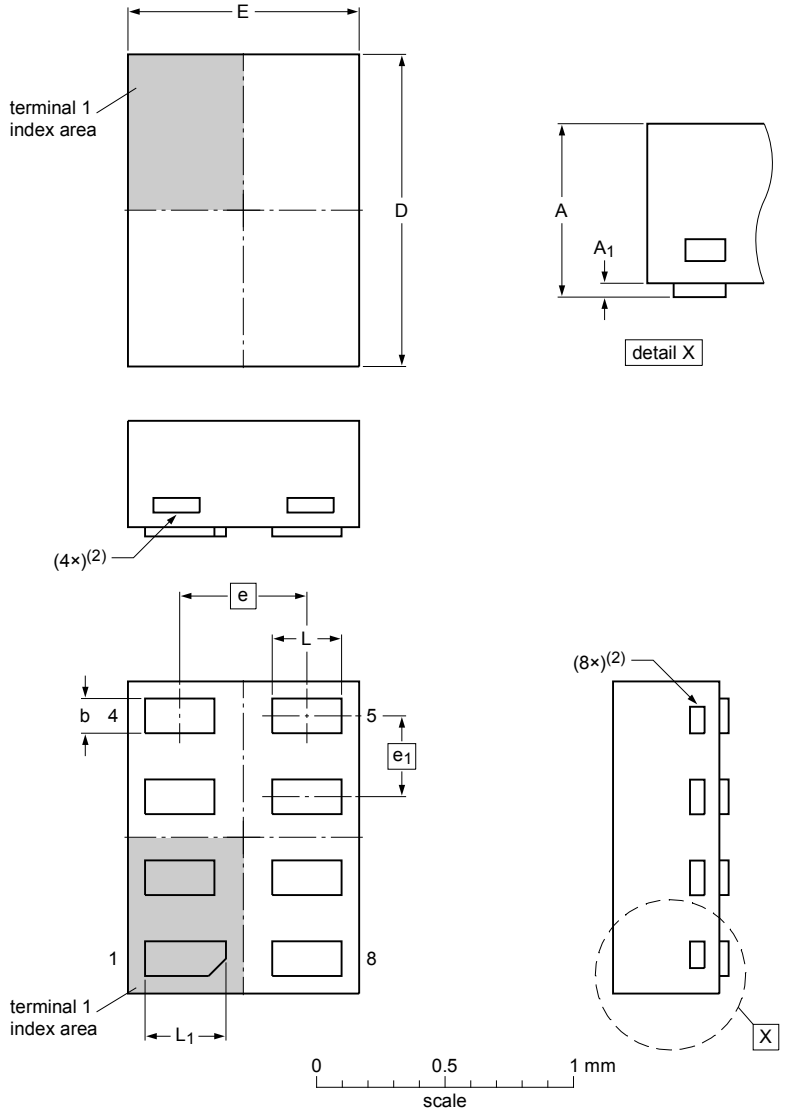

Dimensions

Unit		A(1)	A1	b	D	E	e	e1	L	L1
mm	max	0.5	0.04	0.20	1.40	1.05			0.35	0.40
	nom			0.15	1.35	1.00	0.55	0.35	0.30	0.35
	min			0.12	1.30	0.95			0.27	0.32

Note
1. Including plating thickness.
2. Visible depending upon used manufacturing technology.

sot1089_po

Outline version	References				European projection	Issue date
	IEC	JEDEC	JEITA			
SOT1089		MO-252				~~10-04-09~~ 10-04-12

Fig. 19. Package outline SOT1089 (XSON8)

All information provided in this document is subject to legal disclaimers.

© Nexperia B.V. 2018. All rights reserved

XQFN8: plastic, extremely thin quad flat package; no leads; 8 terminals; body 1.6 x 1.6 x 0.5 mm **SOT902-2**

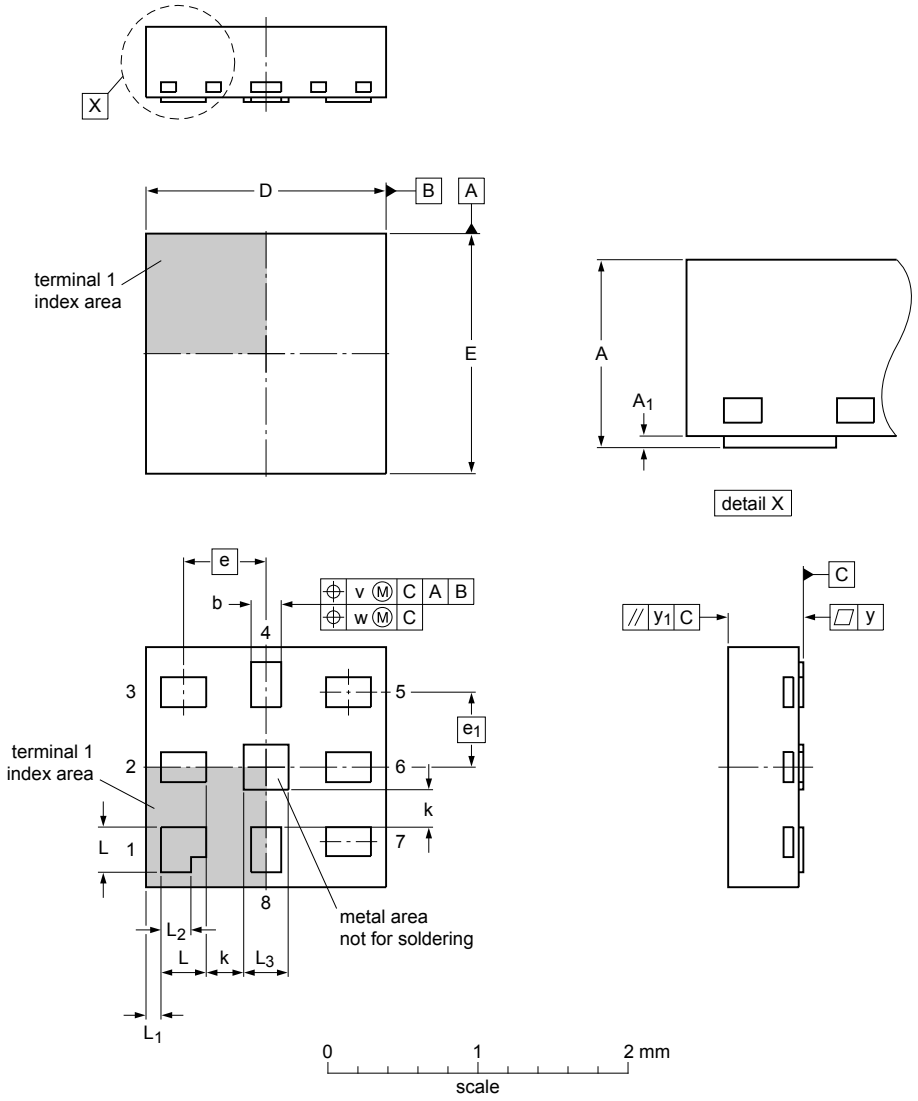

Dimensions

Unit(1)		A	A_1	b	D	E	e	e_1	k	L	L_1	L_2	L_3	v	w	y	y_1
mm	max	0.5	0.05	0.25	1.65	1.65				0.35	0.15	0.25	0.35				
	nom			0.20	1.60	1.60	0.55	0.5		0.30	0.10	0.20	0.30	0.1	0.05	0.05	0.05
	min		0.00	0.15	1.55	1.55			0.2	0.25	0.05	0.15	0.25				

Note

1. Plastic or metal protrusions of 0.075 mm maximum per side are not included.

sot902-2_po

Outline version	References				European projection	Issue date
	IEC	JEDEC	JEITA			
SOT902-2	- - -	MO-255	- - -			~~16-07-14~~ 16-11-08

Fig. 20. Package outline SOT902-2 (XQFN8)

All information provided in this document is subject to legal disclaimers.

© Nexperia B.V. 2018. All rights reserved

XSON8: extremely thin small outline package; no leads; 8 terminals; body 1.2 x 1.0 x 0.35 mm **SOT1116**

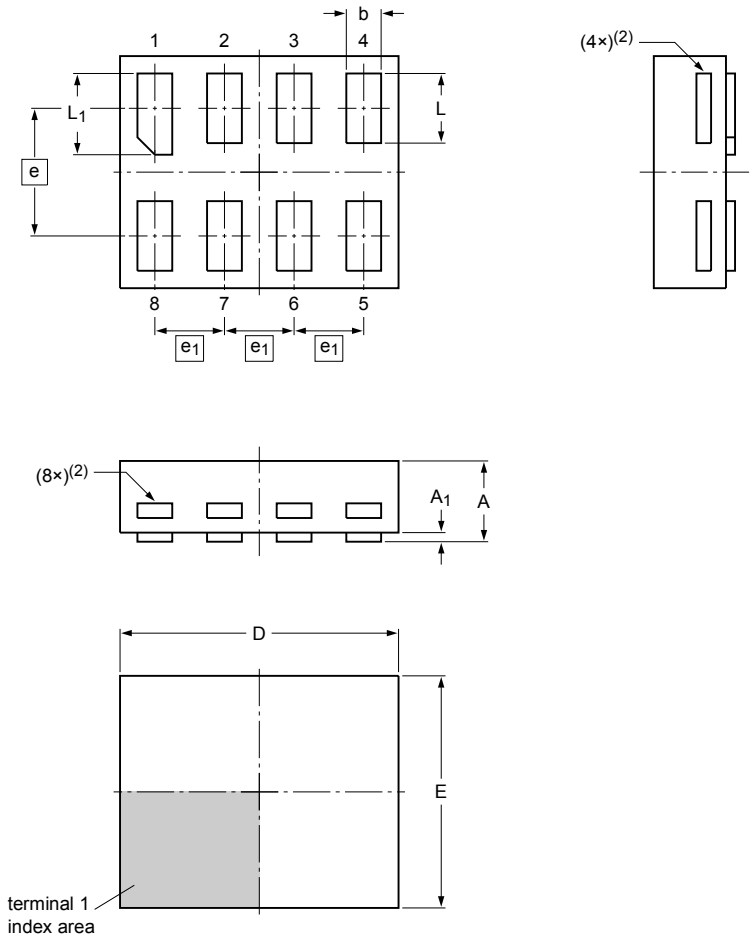

Dimensions

Unit		A(1)	A_1	b	D	E	e	e_1	L	L_1
mm	max	0.35	0.04	0.20	1.25	1.05			0.35	0.40
	nom			0.15	1.20	1.00	0.55	0.3	0.30	0.35
	min			0.12	1.15	0.95			0.27	0.32

Note
1. Including plating thickness.
2. Visible depending upon used manufacturing technology.

sot1116_po

Outline version	References				European projection	Issue date
	IEC	JEDEC	JEITA			
SOT1116						~~10-04-02~~ 10-04-07

Fig. 21. Package outline SOT1116 (XSON8)

All information provided in this document is subject to legal disclaimers.

© Nexperia B.V. 2018. All rights reserved

XSON8: extremely thin small outline package; no leads; 8 terminals; body 1.35 x 1.0 x 0.35 mm **SOT1203**

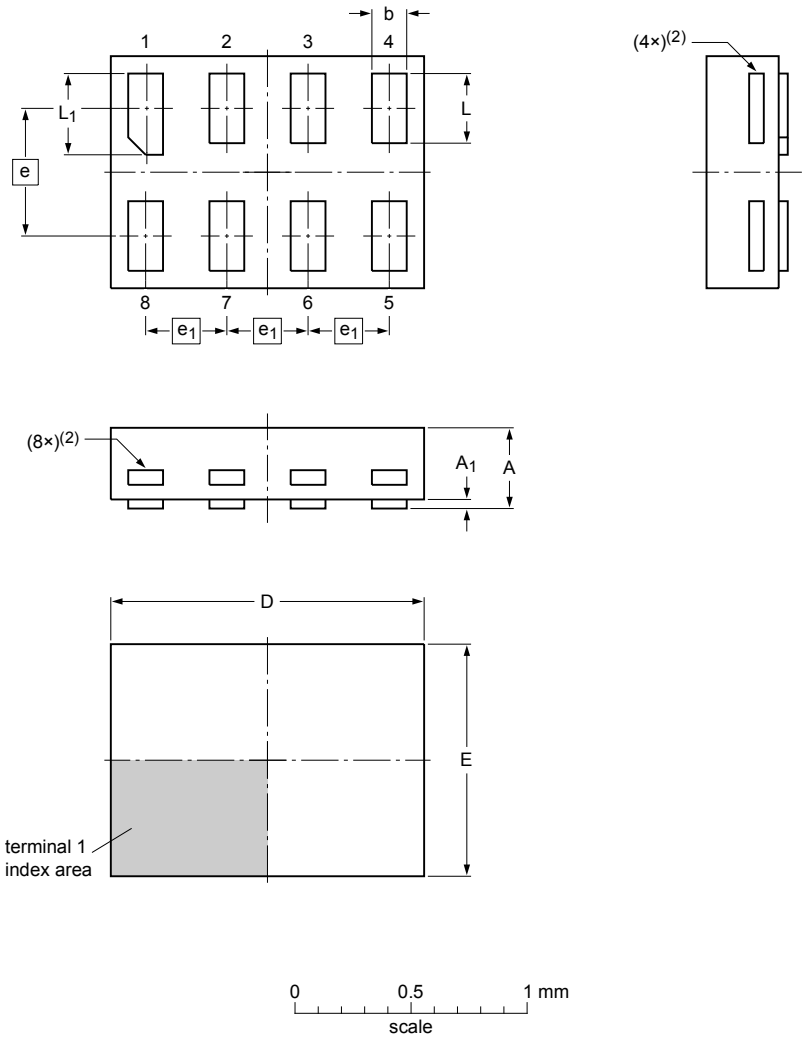

Dimensions

Unit		A(1)	A_1	b	D	E	e	e_1	L	L_1
mm	max	0.35	0.04	0.20	1.40	1.05			0.35	0.40
	nom			0.15	1.35	1.00	0.55	0.35	0.30	0.35
	min			0.12	1.30	0.95			0.27	0.32

Note
1. Including plating thickness.
2. Visible depending upon used manufacturing technology.

sot1203_po

Outline version	References				European projection	Issue date
	IEC	JEDEC	JEITA			
SOT1203						~~10-04-02~~ 10-04-06

Fig. 22. Package outline SOT1203 (XSON8)

All information provided in this document is subject to legal disclaimers.

© Nexperia B.V. 2018. All rights reserved

15. Abbreviations

Table 19. Abbreviations

Acronym	Description
CDM	Charged Device Model
DUT	Device Under Test
ESD	ElectroStatic Discharge
HBM	Human Body Model
MM	Machine Model

16. Revision history

Table 20. Revision history

Document ID	Release date	Data sheet status	Change notice	Supersedes
74LVC_LVCH2T45 v.9	20180813	Product data sheet	-	74LVC_LVCH2T45 v.8
Modifications:	• The format of this data sheet has been redesigned to comply with the identity guidelines of Nexperia. • Legal texts have been adapted to the new company name where appropriate. • Type numbers 74LVC2T45GD and 74LVCH2T45GD (SOT996-2) removed. • Package outline drawing (SOT765-1) modified.			
74LVC_LVCH2T45 v.8	20130329	Product data sheet	-	74LVC_LVCH2T45 v.7
Modifications:	• For type numbers 74LVC2T45GD and 74LVCH2T45GD XSON8U has changed to XSON8.			
74LVC_LVCH2T45 v.7	20120619	Product data sheet	-	74LVC_LVCH2T45 v.6
Modifications:	• For type numbers 74LVC2T45GM and 74LVCH2T45GM the SOT code has changed to SOT902-2.			
74LVC_LVCH2T45 v.6	20111209	Product data sheet	-	74LVC_LVCH2T45 v.5
Modifications:	• Legal pages updated.			
74LVC_LVCH2T45 v.5	20110927	Product data sheet	-	74LVC_LVCH2T45 v.4
74LVC_LVCH2T45 v.4	20100820	Product data sheet	-	74LVC_LVCH2T45 v.3
74LVC_LVCH2T45 v.3	20100119	Product data sheet	-	74LVC_LVCH2T45 v.2
74LVC_LVCH2T45 v.2	20090205	Product data sheet	-	74LVC_LVCH2T45 v.1
74LVC_LVCH2T45 v.1	20081118	Product data sheet	-	-

All information provided in this document is subject to legal disclaimers.

© Nexperia B.V. 2018. All rights reserved

17. Legal information

Data sheet status

Document status [1][2]	Product status [3]	Definition
Objective [short] data sheet	Development	This document contains data from the objective specification for product development.
Preliminary [short] data sheet	Qualification	This document contains data from the preliminary specification.
Product [short] data sheet	Production	This document contains the product specification.

[1] Please consult the most recently issued document before initiating or completing a design.
[2] The term 'short data sheet' is explained in section "Definitions".
[3] The product status of device(s) described in this document may have changed since this document was published and may differ in case of multiple devices. The latest product status information is available on the internet at https://www.nexperia.com.

Definitions

Draft — The document is a draft version only. The content is still under internal review and subject to formal approval, which may result in modifications or additions. Nexperia does not give any representations or warranties as to the accuracy or completeness of information included herein and shall have no liability for the consequences of use of such information.

Short data sheet — A short data sheet is an extract from a full data sheet with the same product type number(s) and title. A short data sheet is intended for quick reference only and should not be relied upon to contain detailed and full information. For detailed and full information see the relevant full data sheet, which is available on request via the local Nexperia sales office. In case of any inconsistency or conflict with the short data sheet, the full data sheet shall prevail.

Product specification — The information and data provided in a Product data sheet shall define the specification of the product as agreed between Nexperia and its customer, unless Nexperia and customer have explicitly agreed otherwise in writing. In no event however, shall an agreement be valid in which the Nexperia product is deemed to offer functions and qualities beyond those described in the Product data sheet.

Disclaimers

Limited warranty and liability — Information in this document is believed to be accurate and reliable. However, Nexperia does not give any representations or warranties, expressed or implied, as to the accuracy or completeness of such information and shall have no liability for the consequences of use of such information. Nexperia takes no responsibility for the content in this document if provided by an information source outside of Nexperia.

In no event shall Nexperia be liable for any indirect, incidental, punitive, special or consequential damages (including - without limitation - lost profits, lost savings, business interruption, costs related to the removal or replacement of any products or rework charges) whether or not such damages are based on tort (including negligence), warranty, breach of contract or any other legal theory.

Notwithstanding any damages that customer might incur for any reason whatsoever, Nexperia's aggregate and cumulative liability towards customer for the products described herein shall be limited in accordance with the Terms and conditions of commercial sale of Nexperia.

Right to make changes — Nexperia reserves the right to make changes to information published in this document, including without limitation specifications and product descriptions, at any time and without notice. This document supersedes and replaces all information supplied prior to the publication hereof.

Suitability for use — Nexperia products are not designed, authorized or warranted to be suitable for use in life support, life-critical or safety-critical systems or equipment, nor in applications where failure or malfunction of an Nexperia product can reasonably be expected to result in personal injury, death or severe property or environmental damage. Nexperia and its suppliers accept no liability for inclusion and/or use of Nexperia products in such equipment or applications and therefore such inclusion and/or use is at the customer's own risk.

Quick reference data — The Quick reference data is an extract of the product data given in the Limiting values and Characteristics sections of this document, and as such is not complete, exhaustive or legally binding.

Applications — Applications that are described herein for any of these products are for illustrative purposes only. Nexperia makes no representation or warranty that such applications will be suitable for the specified use without further testing or modification.

Customers are responsible for the design and operation of their applications and products using Nexperia products, and Nexperia accepts no liability for any assistance with applications or customer product design. It is customer's sole responsibility to determine whether the Nexperia product is suitable and fit for the customer's applications and products planned, as well as for the planned application and use of customer's third party customer(s). Customers should provide appropriate design and operating safeguards to minimize the risks associated with their applications and products.

Nexperia does not accept any liability related to any default, damage, costs or problem which is based on any weakness or default in the customer's applications or products, or the application or use by customer's third party customer(s). Customer is responsible for doing all necessary testing for the customer's applications and products using Nexperia products in order to avoid a default of the applications and the products or of the application or use by customer's third party customer(s). Nexperia does not accept any liability in this respect.

Limiting values — Stress above one or more limiting values (as defined in the Absolute Maximum Ratings System of IEC 60134) will cause permanent damage to the device. Limiting values are stress ratings only and (proper) operation of the device at these or any other conditions above those given in the Recommended operating conditions section (if present) or the Characteristics sections of this document is not warranted. Constant or repeated exposure to limiting values will permanently and irreversibly affect the quality and reliability of the device.

Terms and conditions of commercial sale — Nexperia products are sold subject to the general terms and conditions of commercial sale, as published at http://www.nexperia.com/profile/terms, unless otherwise agreed in a valid written individual agreement. In case an individual agreement is concluded only the terms and conditions of the respective agreement shall apply. Nexperia hereby expressly objects to applying the customer's general terms and conditions with regard to the purchase of Nexperia products by customer.

No offer to sell or license — Nothing in this document may be interpreted or construed as an offer to sell products that is open for acceptance or the grant, conveyance or implication of any license under any copyrights, patents or other industrial or intellectual property rights.

Export control — This document as well as the item(s) described herein may be subject to export control regulations. Export might require a prior authorization from competent authorities.

Non-automotive qualified products — Unless this data sheet expressly states that this specific Nexperia product is automotive qualified, the product is not suitable for automotive use. It is neither qualified nor tested in accordance with automotive testing or application requirements. Nexperia accepts no liability for inclusion and/or use of non-automotive qualified products in automotive equipment or applications.

In the event that customer uses the product for design-in and use in automotive applications to automotive specifications and standards, customer (a) shall use the product without Nexperia's warranty of the product for such automotive applications, use and specifications, and (b) whenever customer uses the product for automotive applications beyond Nexperia's specifications such use shall be solely at customer's own risk, and (c) customer fully indemnifies Nexperia for any liability, damages or failed product claims resulting from customer design and use of the product for automotive applications beyond Nexperia's standard warranty and Nexperia's product specifications.

Translations — A non-English (translated) version of a document is for reference only. The English version shall prevail in case of any discrepancy between the translated and English versions.

Trademarks

Notice: All referenced brands, product names, service names and trademarks are the property of their respective owners.

All information provided in this document is subject to legal disclaimers.

© Nexperia B.V. 2018. All rights reserved

Contents

1. General description.....1
2. Features and benefits.....1
3. Ordering information.....2
4. Marking.....2
5. Functional diagram.....3
6. Pinning information.....3
6.1. Pinning.....3
6.2. Pin description.....4
7. Functional description.....4
8. Limiting values.....5
9. Recommended operating conditions.....5
10. Static characteristics.....6
11. Dynamic characteristics.....9
11.1. Waveforms and test circuit.....15
12. Typical propagation delay characteristics.....17
13. Application information.....23
13.1. Unidirectional logic level-shifting application.....23
13.2. Bidirectional logic level-shifting application.....24
13.3. Power-up considerations.....24
13.4. Enable times.....25
14. Package outline.....26
15. Abbreviations.....32
16. Revision history.....32
17. Legal information.....33

© Nexperia B.V. 2018. All rights reserved

For more information, please visit: http://www.nexperia.com
For sales office addresses, please send an email to: salesaddresses@nexperia.com
Date of release: 13 August 2018