DWG. SIZE	DWG. NO.
D	031–0478

REVISIONS

SYM.	E.C.N.	DATE	APVD.
A	25121	5/12/03	
	REVISED DIAL PLATE		

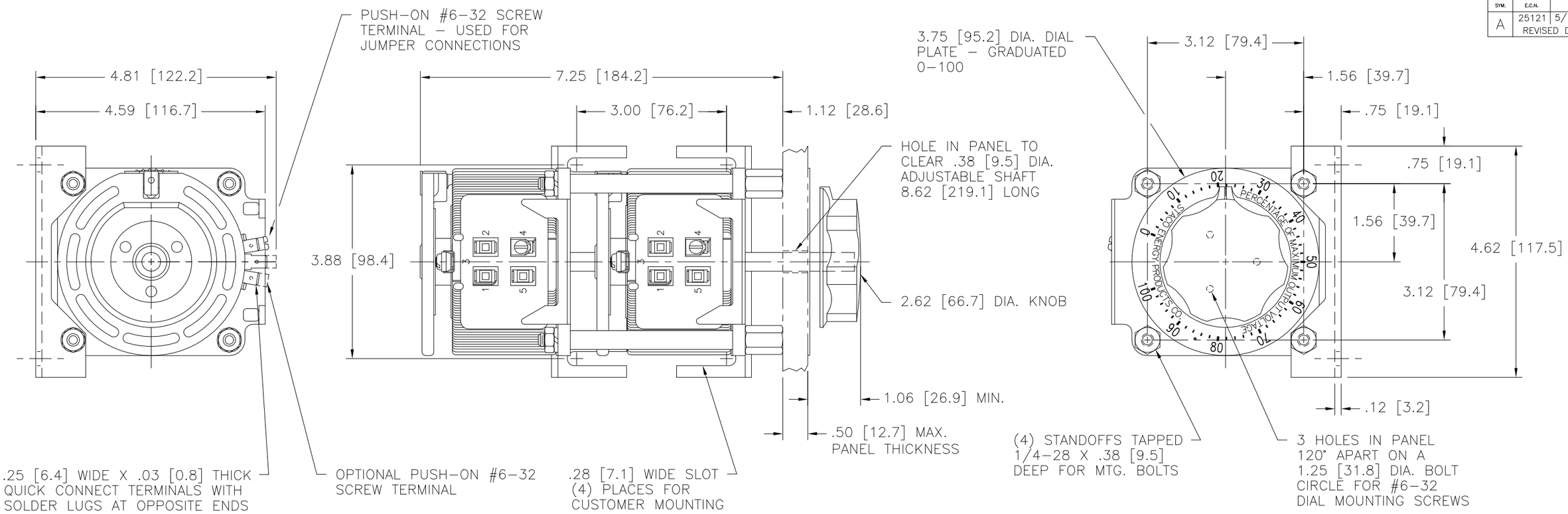

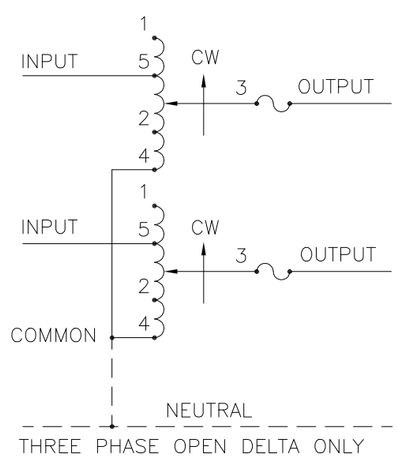

SCHEMATIC
THREE PHASE OPEN DELTA AND SINGLE PHASE SERIES. FUSE RECOMMENDED BUT NOT SUPPLIED.

π IF GANGED UNITS ARE USED IN A SYSTEM THAT ORDINARILY HAS A COMMON NEUTRAL OR GROUND BETWEEN SOURCE AND LOAD, THE NEUTRAL OR GROUND MUST BE CONNECTED TO THE COMMON TERMINALS OF THE VARIABLE TRANSFORMER ASSEMBLY. IF THE SYSTEM HAS NO NEUTRAL, THE LOAD MUST BE BALANCED OR THE TRANSFORMER WILL BE DAMAGED.

■ JUMPER PROVIDED IN STANDARD COMMON POSITION AND SHOULD BE MOVED OR REMOVED AS REQUIRED.

++ LINE TO LINE VOLTAGE.

SPECIFICATIONS

WIRING	INPUT VOLTS	INPUT HERTZ	OUTPUT VOLTS	CONSTANT CURRENT LOAD MAX. AMPS	CONSTANT CURRENT LOAD MAX. KVA	CONSTANT IMPEDANCE LOAD MAX. AMPS	CONSTANT IMPEDANCE LOAD MAX. KVA	SHAFT ROTATION TO INCREASE VOLTAGE	TERMINAL CONNECTIONS FOR INCREASING VOLTAGE AS VIEWED FROM BASE END ■ INPUT	JUMPER	OUTPUT
SINGLE PHASE SERIES	240	50/60	0–240	5	1.2	7	1.68	CW	1–1	4–4	3–3
								CCW	4–4	1–1	3–3
			0–280	5	1.4	——	——	CW	5–5	4–4	3–3
								CCW	2–2	1–1	3–3
THREE PHASE OPEN DELTA π	120 ++	50/60	0–120	5	1.04	7	1.46	CW	1–4–1	4–4	3–4–3
								CCW	4–1–4	1–1	3–1–3
			0–140	5	1.21	——	——	CW	5–4–5	4–4	3–4–3
								CCW	2–1–2	1–1	3–1–3

UNLESS OTHERWISE SPECIFIED, TOLERANCE IS ±
DECIMALS .XX .03 .XXX .005 HOLES .002 ANGLES 1° DRAFT 1–1/2°
UNITS IN [mm]
MATERIAL :
ALL DIMENSIONS APPLY AFTER PLATING

TITLE: SPEC. CONTROL DRAWING VARIABLE TRANSFORMER MODEL: 501C–2

STACO ENERGY PRODUCTS CO.
A Components Corporation of America Company
3021 Gaddis Boulevard Dayton, Ohio 45408 USA

The information and design disclosed herein was originated by and is the property of STACO ENERGY PRODUCTS CO., which reserves all patent, proprietary, design, manufacturing, reproduction, use and sale rights thereto, and to any article disclosed therein except to the extent rights are expressly granted to others. The foregoing does not apply to vendor proprietary parts.

DRAWN BY	DATE	FIRST USED ON	DO NOT SCALE DWG.
TIM RAU	3/15/99		
CHECKER	DATE	WEIGHT APPROX. 10.5 LBS	CAGE CODE 83008
ENGINEER	DATE	SCALE 1=1	SHEET 1 OF 1

DWG. SIZE D — DWG. NO. 031–0478