| REVISIONS | | | |
|---|---|---|---|
| REV | DESCRIPTION | DATE | APPROVED |
| A1 | REVISED PER ECO-11-005294 | 14APR11 | HMR |

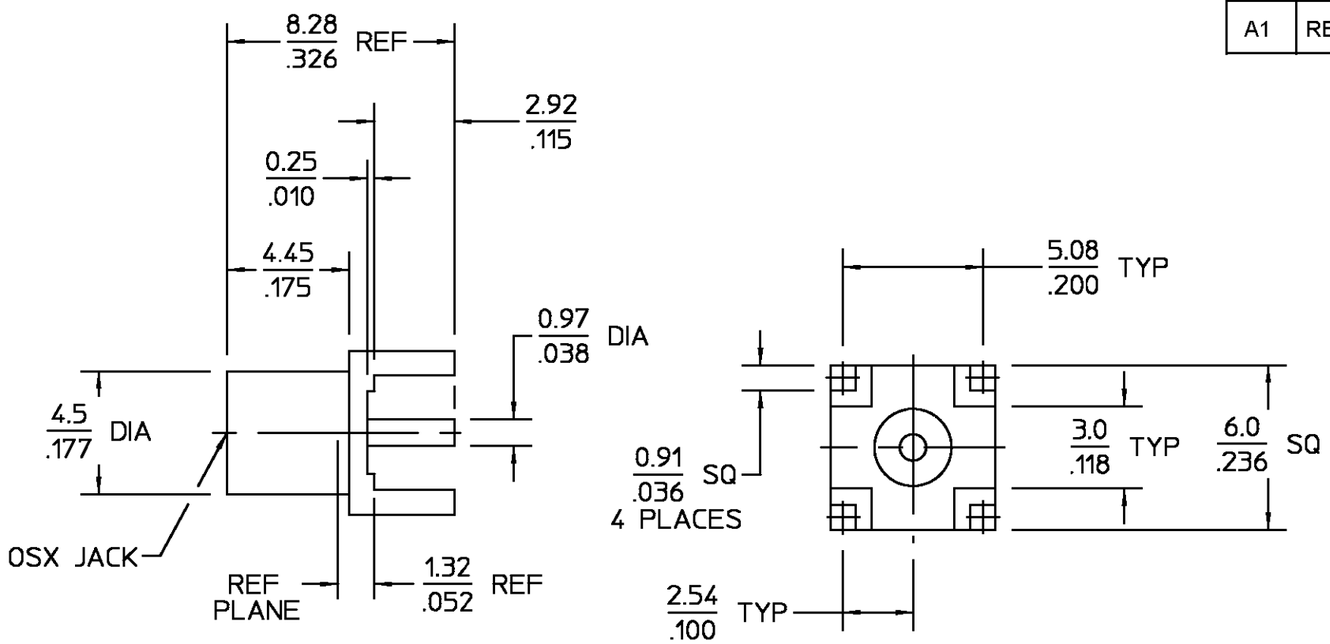


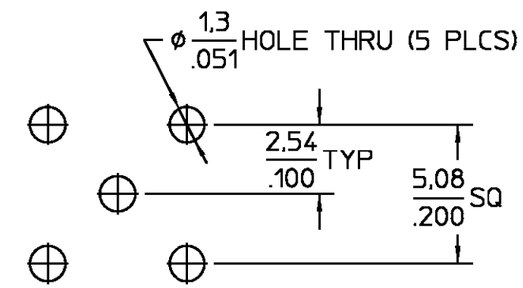


RECOMMENDED MOUNTING HOLE PATTERN

CAPTURED CENTER CONTACT

| ELECTRICAL | MECHANICAL | ENVIRONMENTAL |
|---|---|---|
| Nominal Impedance (Ohms) 50 | Force to Engage: (Lbs) | Temperature Rating |
| Frequency Range (GHz) DC TO 6.0 | 3.4 MAX | -65°C to +165°C |
| Voltage Rating | Force to Disengage: (Lbs) | Vibration |
| (VRMS MAX) 335 @ Sea level | 1.77 MIN - 4.5 MAX | MIL-STD-202, Method 204, |
| VSWR N/A | Center Contact Captivation: | Condition B |
| Insertion Loss N/A | Axial 4.5lbs @ 1 minute | Thermal shock |
| Corona, 70,000 Ft (VRMS MIN) 250 | with .006" displacement | MIL-STD-202, Method 107, |
| D.W.V. | | Condition B |
| (VRMS MIN) 1000 | | Moisture Resistance |
| Contact Resistance | XX.XX = mm | MIL-STD-202, Method 106 |
| Center Contact (Milliohms MAX) 5.0 | .XXX = in | Corrosion |
| Outer Contact (Milliohms MAX) 1.0 | | MIL-STD-202, |
| RF High Potential | | Method 101, Condition B, |
| (VRMS MIN @ 5 MHz) 670 | | 48 Hrs |
| I.R. (Megohms Min) 10,000 | | |

| COMPONENT | MATERIAL | FINISH |
|---|---|---|
| HOUSING | BRASS, PER ASTM-B-16 HALF HARD | NICKEL PLATE PER QQ-N-290 |
| DIELECTRIC | TFE FLUOROCARBON PER ASTM-D-1457 | N/A |
| CENTER CONTACT | BERYLLIUM COPPER PER ASTM B 196, ALLOY C17300, CONDITION H | GOLD PLATE PER MIL-G-45204 |

UNLESS OTHERWISE SPECIFIED DIMENSIONS ARE IN MILLIMETERS
TOLERANCE ON
DEC ±0.13 ANGLES ± 1°

DRAWN BY K.C.MAHER DATE 10/18/90
CHECKED BY M.Y. 10-19-90
APP'D BY QRL 10-19-90

TE Connectivity

USE ASS'Y PROCEDURE
N/A
NO. A.P._____

TITLE
OSX PRINTED WIRING BOARD JACK RECEPTACLE STRAIGHT TERMINAL

| SIZE | CODE IDENT NO. | | REV |
|---|---|---|---|
| B | 26805 | 1060985-1 | A1 |

CUSTOMER DRAWING SCALE 5 : 1 SHEET 1 OF 1