THIS DRAWING IS UNPUBLISHED. RELEASED FOR PUBLICATION -,- .
© COPYRIGHT - BY TYCO ELECTRONICS CORPORATION. ALL RIGHTS RESERVED.

LOC	DIST
AD	00

REVISIONS

P	LTR	DESCRIPTION	DATE	DWN	APVD
	H	REVISED PER EC 0G3C-0205-05	27FEB06	SSK	MM
	H1	REVISED PER ECO-09-021826	02SEP09	KK	AEG

1. GOLD PLATE .00076 [.000030] MIN. THICK.
2. NICKEL PL. .00127[.000050] MIN. THK. PER QQ-N-290
3. SOLDER PL. .00254[.000100] MIN. THK.
4. STAMPED P/N & DATE CODE.
5. OPTIONAL: KEYING PLUG FOR INTERCONTACT KEYING IS 118982-1
6. OPTIONAL: CARD GUIDE (BASE NO 117169)
7. ALL PARTS ASSEMBLED IN MEXICO MUST BE STAMPED "ASSY IN MEXICO". THE WORD "MEXICO" CAN BE SUBSTITUTED ONLY WHERE PART SIZE PROHIBITS STAMPING "ASSY IN MEXICO", INK COLOR WHITE PER 115-9009, APPROX WHERE SHOWN, SIDE OPTIONAL.
8. ACTION PIN REQUIRES 2.13[.084] MIN. THK. PC BOARD.

REQUIRED HOLE DIAMETER TOLERANCES FOR COMPLIANT SECTION

REQ'D DRILL SIZE	HOLE DIA ±.03[.001]	PLATING THICKNESS		HOLE DIAMETER		COPPER HARDNESS (KNOOP)	PAD DIA MIN.
		COPPER	TIN/LEAD	AFTER PLATING	AFTER REFLOW		
1.15mm	1.15 [.0453]	0.03-0.08 [.001-.003]	0.008 MIN. [.0003] MIN.	0.94-1.09 [.037-.043]	0.914-1.09 [.0036-.043]	150 MAX	1.57 [.062]
1.15mm	1.15 [.0453]	NOT PLATED THRU					1.65 [.065]

9. MATTE TIN PL. .00254[.000100] MIN. THK.
10. OBSOLETE PARTS: OBSOLETE CIS STREAMLINING PER D.RENAUD/D.SINISI

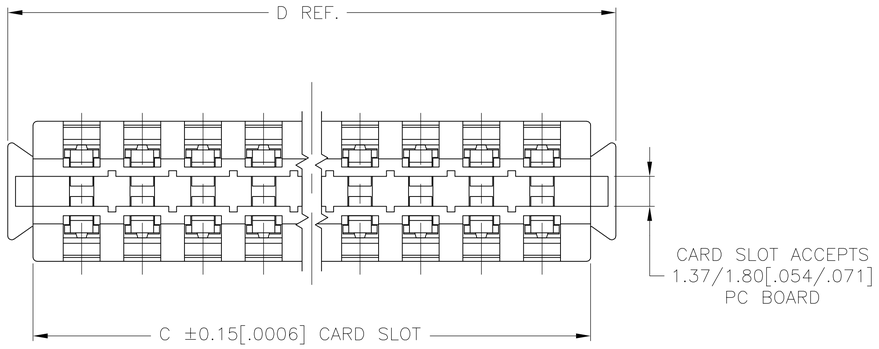

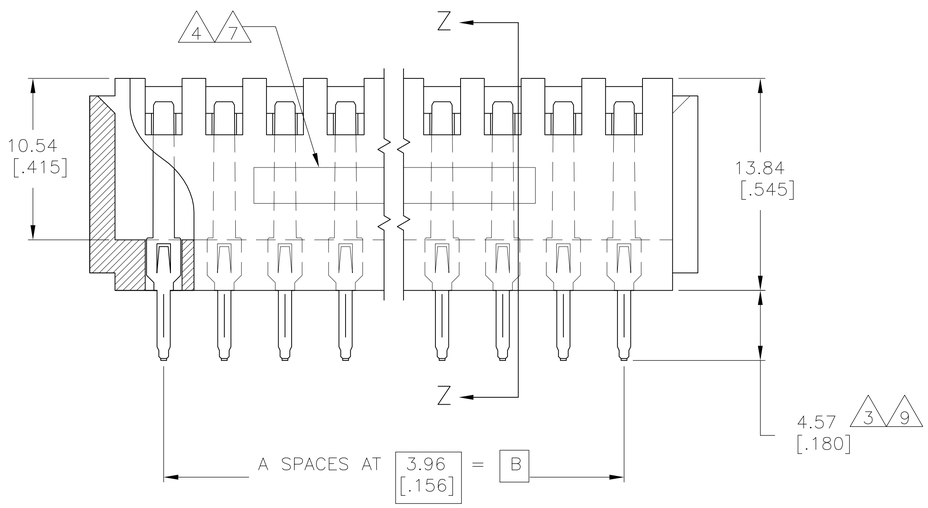

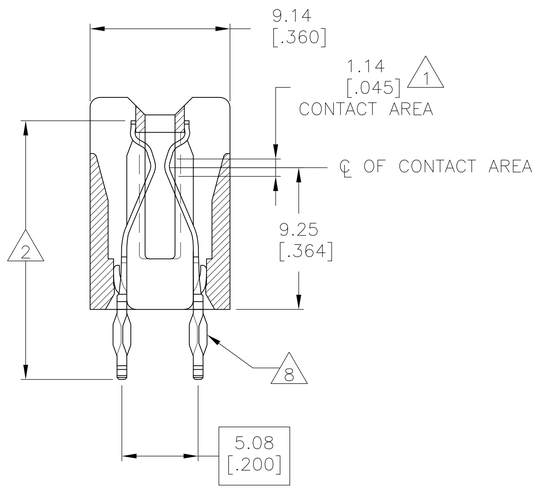

SECTION Z-Z

9 10 OBSOLETE	~~177.65 [6.994]~~	~~174.35 [6.864]~~	~~166.42 [6.552]~~	~~42~~	~~43~~	~~7-119790-9~~
9	118.21 [4.654]	114.91 [4.524]	106.98 [4.212]	27	28	6-119790-4
9	94.44 [3.718]	91.13 [3.588]	83.21 [3.276]	21	22	5-119790-8
9 10 OBSOLETE	~~66.70 [2.626]~~	~~63.40 [2.496]~~	~~55.47 [2.184]~~	~~14~~	~~15~~	~~5-119790-1~~
	177.65 [6.994]	174.35 [6.864]	166.42 [6.552]	42	43	2-119790-9
	-	-	-	-	-	2-119790-8
	-	-	-	-	-	2-119790-7
OBSOLETE	-	-	-	-	-	~~2-119790-6~~
	-	-	-	-	-	2-119790-5
	-	-	-	-	-	2-119790-4
	-	-	-	-	-	2-119790-3
OBSOLETE	~~149.91 [5.702]~~	~~146.61 [5.772]~~	~~138.68 [5.468]~~	~~35~~	~~36~~	~~2-119790-2~~
	-	-	-	-	-	2-119790-1
	-	-	-	-	-	2-119790-0
	-	-	-	-	-	1-119790-9
	-	-	-	-	-	1-119790-8
	-	-	-	-	-	1-119790-7
	-	-	-	-	-	1-119790-6
	-	-	-	-	-	1-119790-5
	118.21 [4.654]	114.91 [4.524]	106.98 [4.212]	27	28	1-119790-4
OBSOLETE	~~114.25 [4.498]~~	~~110.95 [4.368]~~	~~103.02 [4.056]~~	~~26~~	~~27~~	~~1-119790-3~~
	-	-	-	-	-	1-119790-2
	-	-	-	-	-	1-119790-1
OBSOLETE	~~102.36 [4.030]~~	~~99.06 [3.900]~~	~~91.13 [3.588]~~	~~23~~	~~24~~	~~1-119790-0~~
	-	-	-	-	-	119790-9
	94.44 [3.718]	91.13 [3.588]	83.21 [3.276]	21	22	119790-8
	-	-	-	-	-	119790-7
	-	-	-	-	-	119790-6
	-	-	-	-	-	119790-5
OBSOLETE	-	-	-	-	-	~~119790-4~~
	-	-	-	-	-	119790-3
	-	-	-	-	-	119790-2
10 OBSOLETE	~~66.70 [2.626]~~	~~63.40 [2.496]~~	~~55.47 [2.184]~~	~~14~~	~~15~~	~~119790-1~~
	D	C	B	A	POSN	PART NO.

THIS DRAWING IS A CONTROLLED DOCUMENT.

DIMENSIONS: mm [INCHES]

TOLERANCES UNLESS OTHERWISE SPECIFIED:
0 PLC ± -
1 PLC ± -
2 PLC ± -
3 PLC ± 0.25[.010]
4 PLC ± -
ANGLES ± -

MATERIAL: HOUSING: VALOX 420 SEO,BLACK CONTACTS: COPPER NICKEL
FINISH 1 2 3 9

DWN R.L. LEHR 10-FEB-93
CHK H. ROSE 7/8/94
APVD H. ROSE 7/8/94
PRODUCT SPEC —
APPLICATION SPEC —
WEIGHT —

Tyco Electronics
Tyco Electronics Corporation
Harrisburg, Pa 17105-3608

NAME CONNECTOR, AMP PACE .156 X .200

SIZE	CAGE CODE	DRAWING NO	RESTRICTED TO
A1	00779	C-119790	—

CUSTOMER DRAWING
SCALE 4:1 SHEET 1 OF 1 REV H1