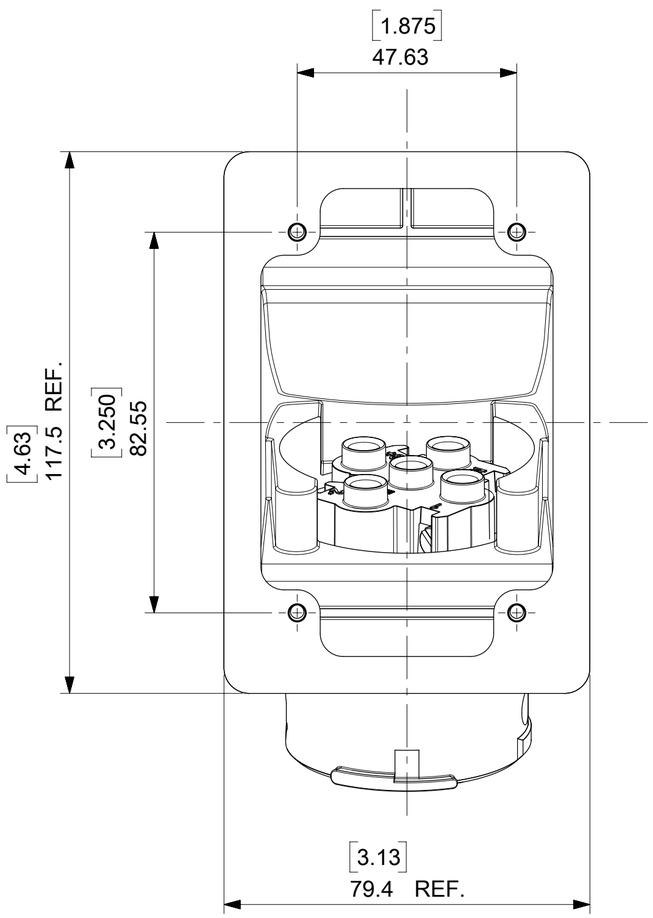


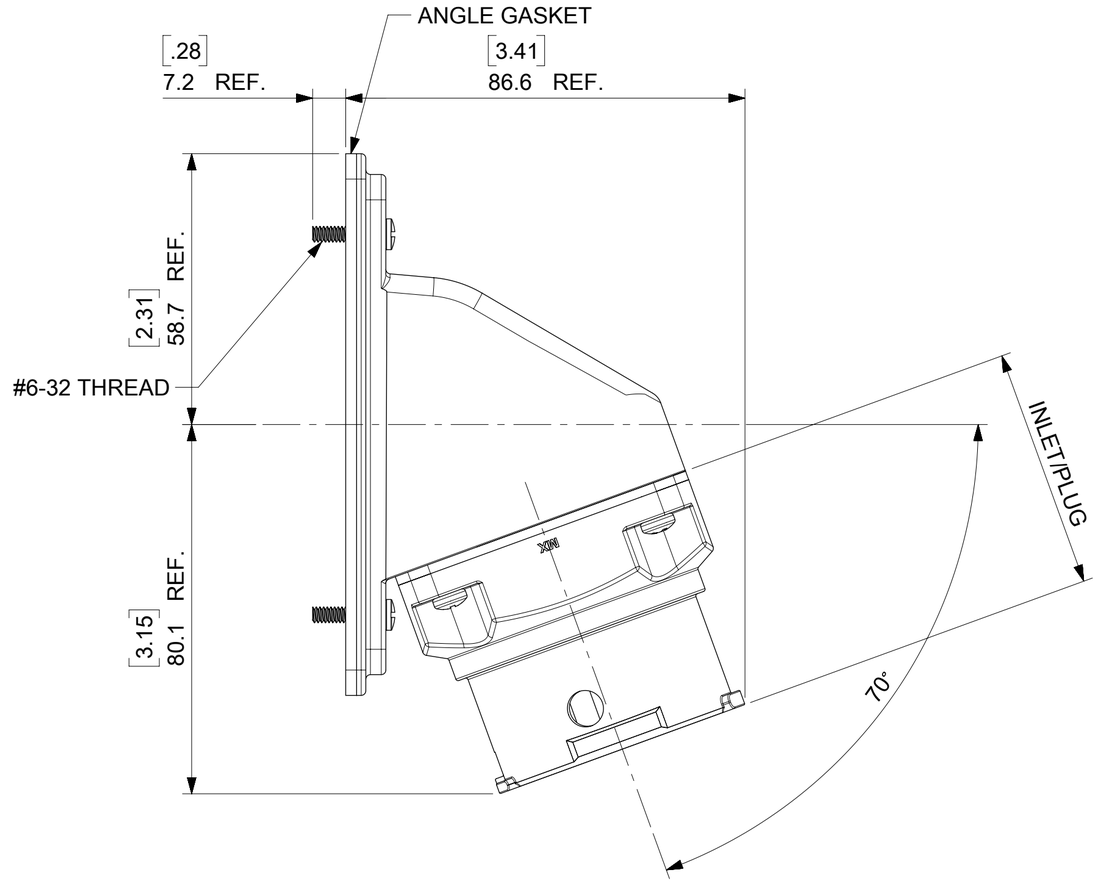


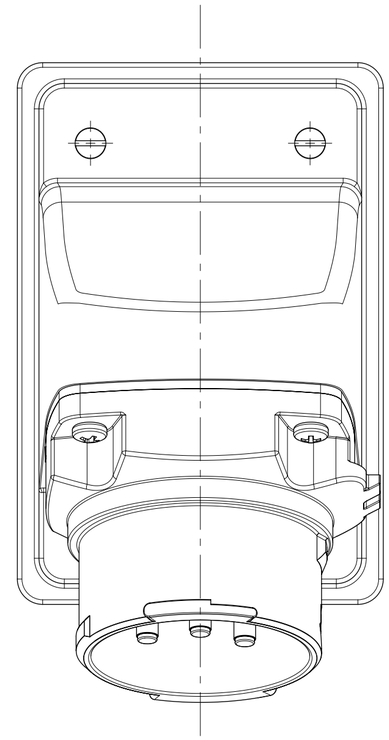

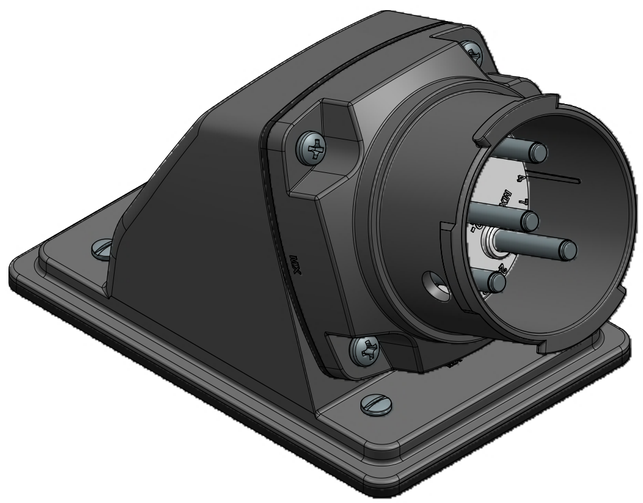

| MATERIAL NUMBER | ENGINEERING NUMBER | DESCRIPTION | INSULATOR KEYING POSITION | HORSEPOWER RATING |
|---|---|---|---|---|
| 1122191043 | ARC30MAA01 | ARC 30A MA 125VAC 1P+N+G | 7 | 1 HP |
| 1122191044 | ARC30MAB02 | ARC 30A MA 250VAC 2P+G | | 3 HP |
| 1122191045 | ARC30MAB03 | ARC 30A MA 250VAC 3P+G | | 5 HP |
| 1122191046 | ARC30MAAB04 | ARC 30A MA 125/250VAC 2P+N+G | | NA |
| 1122191047 | ARC30MAC02 | ARC 30A MA 208VAC 2P+G | 16 | NA |
| 1122191048 | ARC30MAC03 | ARC 30A MA 208VAC 3P+G | | 5 HP |
| 1122191049 | ARC30MAAC05 | ARC 30A MA 120/208VAC 3P+N+G | | NA |
| 1122191050 | ARC30MAD01 | ARC 30A MA 277VAC 1P+N+G | 4 | NA |
| 1122191051 | ARC30MAE02 | ARC 30A MA 480VAC 2P+G | | NA |
| 1122191052 | ARC30MAE03 | ARC 30A MA 480VAC 3P+G | | 10 HP |
| 1122191053 | ARC30MADE05 | ARC 30A MA 277/480VAC 3P+N+G | | NA |
| 1122191054 | ARC30MAF02 | ARC 30A MA 600VAC 2P+G | 14 | NA |
| 1122191055 | ARC30MAF03 | ARC 30A MA 600VAC 3P+G | | NA |
| 1122191056 | ARC30MAGF05 | ARC 30A MA 347/600VAC 3P+N+G | | NA |

ARC30MAE03 SHOWN

NOTES:

MATERIALS:
- ANGLE, HOUSINGS AND INSULATORS: GLASS FILLED PBT
- CONTACTS: COPPER ALLOY WITH A SILVER NICKEL TIP, SILVER PLATED
- MOUNTING AND INTERFACE GASKETS: SILICONE
- SELF TAPPING SCREWS (PHILLIPS) - STAINLESS STEEL
- ANGLE MOUNTING SCREWS (SLOTTED) - STAINLESS STEEL
- ANGLE GASKET - EPDM

RATINGS:
- CURRENT: 30 AMPS
- VOLTAGE AND HORSEPOWER: SEE TABLE
- OPERATING TEMPERATURE: -25°C (-13°F) TO 60°C (140°F)
- ENVIRONMENTAL: TYPE 4X, IP69K
- WIRING CAPACITY: 12 AWG MIN. TO 8 AWG MAX.
- TORQUE TERMINAL SCREWS TO 1.7 N-M (15 in/lbs)
- AGENCY: UL LISTING PENDING
  - SWITCH RATED RECEPTACLE/CONNECTOR
  - BRANCH CIRCUIT DISCONNECT SWITCH
  - MOTOR CIRCUIT DISCONNECT SWITCH IF HP RATED

INLET/PLUG AND HANDLE ARE PACKAGED AS SUB-ASSEMBLIES AND WILL REQUIRE END USER ASSEMBLY.

THIS DRAWING CONTAINS INFORMATION THAT IS PROPRIETARY TO MOLEX ELECTRONIC TECHNOLOGIES, LLC AND SHOULD NOT BE USED WITHOUT WRITTEN PERMISSION

SYMBOLS: = 0

DIMENSION UNITS: INCH | SCALE: 1:1

GENERAL TOLERANCES (UNLESS SPECIFIED)

| | MM | INCH |
|---|---|---|
| 4 PLACES | ± | ± |
| 3 PLACES | ± | ± |
| 2 PLACES | ± | ± |
| 1 PLACE | ± | ± |
| 0 PLACES | ± | ± |
| ANGULAR TOL | ± ° | |

DRAFT WHERE APPLICABLE MUST REMAIN WITHIN DIMENSIONS

CURRENT REV DESC: ADDED 10HP,NEW NOTES

EC NO: 604773
DRWN: MJANTELEZIO 2018/09/20
CHK'D: JFMURPHY 2018/11/05
APPR: JFMURPHY 2018/11/05

INITIAL REVISION:
DRWN: DRWN BY XXXX/XX/XX
APPR: APPR BY XXXX/XX/XX

THIRD ANGLE PROJECTION | DRAWING: C-SIZE | SERIES: 112219

molex

ARC 30A MA 480VAC 3P+G

PRODUCT CUSTOMER DRAWING

| DOCUMENT NUMBER | DOC TYPE | DOC PART | REVISION |
|---|---|---|---|
| 1122191052 | PSD | 000 | A2 |

MATERIAL NUMBER | CUSTOMER: GENERAL MARKET | SHEET NUMBER: 1 OF 1

| DOCUMENT STATUS | P1 | RELEASE DATE | 2018/11/05 17:31:37 |
|---|---|---|---|