THIS DRAWING IS A CONTROLLED DOCUMENT.

REVISIONS

P	LTR	DESCRIPTION	DATE	DWN	APVD
	BA1	ECR-14-009193	19JUN2014	KR	TN

FOR FURTHER INFORMATION SEE DATA SHEET FOR
CPF SERIES-THIN FILM PRECISION CHIP RESISTORS

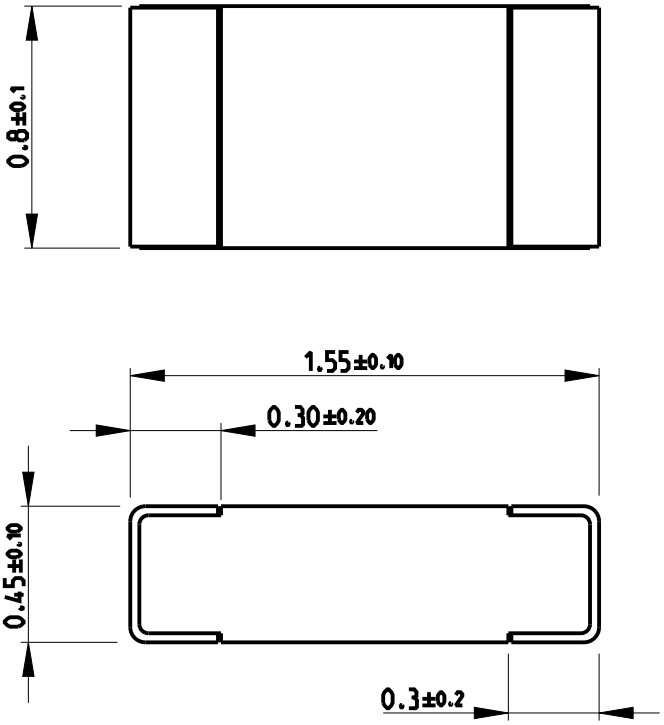

RoHS Compliant

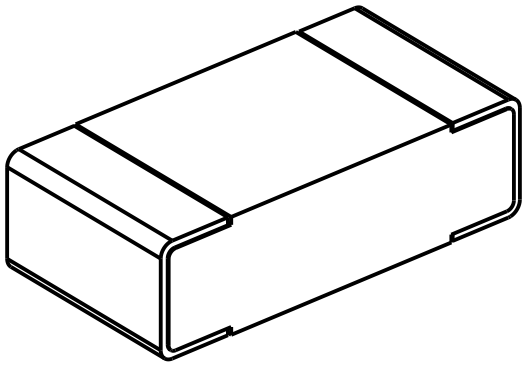

THIS DRAWING IS UNPUBLISHED. © COPYRIGHT 2008 BY - ALL RIGHTS RESERVED. RELEASED FOR PUBLICATION 2008

DIMENSIONS: mm

TOLERANCES UNLESS OTHERWISE SPECIFIED:

0 PLC	±0.2
1 PLC	±0.1
2 PLC	±
3 PLC	±
4 PLC	±
ANGLES	±5°

DWN	SUBHASH.M	29-Sep-08
CHK	PRAKASH.S	29-Sep-08
APVD	STEPHEN.P	29-Sep-08

PRODUCT SPEC: -

APPLICATION SPEC: -

WEIGHT: -

MATERIAL: -

FINISH: -

TE Connectivity

NAME: THIN FILM PRECISION CHIP RESISTORS SERIES CPF 0603

SIZE	CAGE CODE	DRAWING NO	RESTRICTED TO
A4	00779	C-1879335	-

Customer Drawing

SCALE 40:1 | SHEET 1 OF 1 | REV BA1

1469-35 (3/13)