# Modular Jack Connector for High-Speed Transmission

## TM24R Series

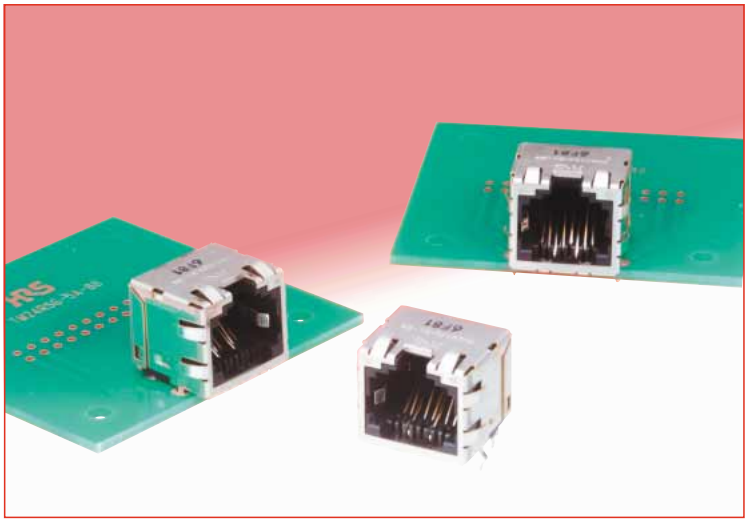

## Features

### 1. Unique contact configuration (Patented) and board-mounting pattern

The adjacent contacts have different angles of engagement thus increasing the distance between them, in effect reducing the cross talk within connector and its footprint.

Contact #3 and # 6, affecting the cross talk the most; have been isolated from other contacts resulting in maximum NEXT noise suppression.

In addition, the board layout allows easy tracing of the differential signal lines.

### 2. Full EMI shielding

The entire connector is covered with a metal shell.

Multiple panel ground contact springs (2 on each side of the mating opening) and 4 board ground connection solder contacts placed at each corner of the connector guarantee effective suppression of noise radiation.

### 3. Sequential mating

Separate ground springs (Patent pending) make contact with the mating connector's ground before the signal contacts, allowing equalization of any ground differential.

### 4. Conforms to FCC (Federal Communications Commission) standards

Meets requirements of FCC Title 47, Part 68, Subpart F.

## Applications

LAN related equipment, measuring instruments, office equipment and other high transmission speed applications requiring use of high performance modular jacks.

Unique Contact Configuration

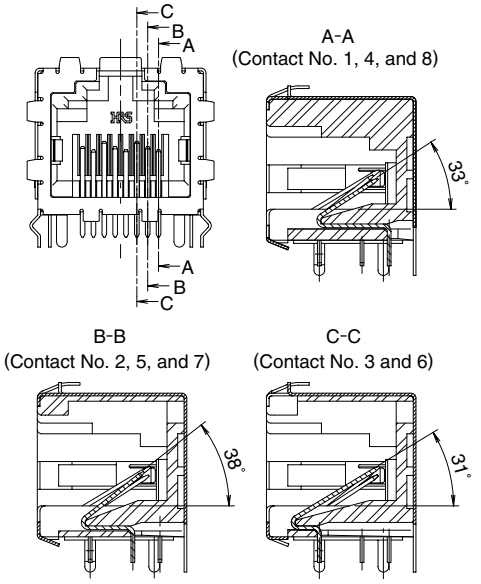


Recommended board layout for differential routing

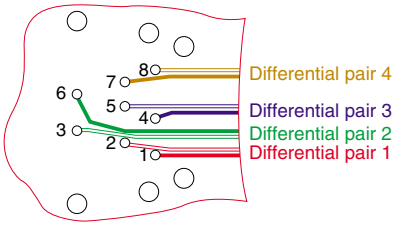


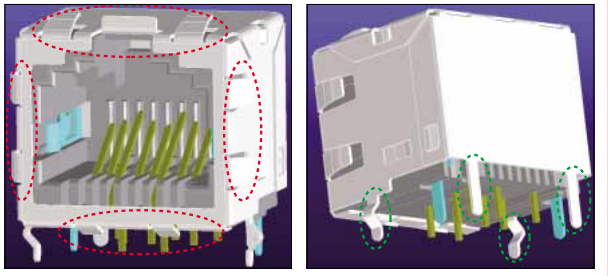

Panel ground contact springs

Board ground connection solder contacts

Separate ground springs

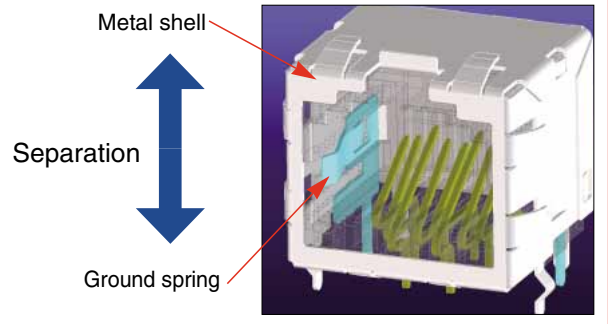

## ■Product Specifications

| Ratings | Current rating 1A<br>Voltage rating 125V AC | Operating temperature range: -25℃ to +80℃ (Note) |
|---|---|---|

| Item | Specification | Conditions |
|---|---|---|
| 1. Insulation resistance | 100M ohms min. | 100V DC |
| 2. Withstanding voltage<br>(Basic terminal between 123-456-78) | No flashover or insulation breakdown. | 500V AC / one minute |
| 3. Withstanding voltage<br>(Terminal to shield) | No flashover or insulation breakdown. | 1500V AC / one minute |
| 4. Contact resistance | 50m ohms max. | 100mA |
| 5. Vibration | No electrical discontinuity of 5μs or more.<br>No damage, cracks, or parts dislocation. | Frequency: 10 to 55 Hz, single amplitude of 0.75mm, 3 axis, 10 cycles |
| 6. Shock | No electrical discontinuity of 5μs or more.<br>Contact resistance: 60 m ohms max. | Acceleration of 490 m/s2, 11 ms duration, sine half-wave waveform, 3 cycles / each of 6 axis |
| 7. Durability (insertion/withdrawal) | Contact resistance: 60 m ohms max. | 700 cycles |
| 8. Temperature cycle | Insulation resistance: 100 M ohms min.<br>Contact resistance: 60 m ohms max. | (Temperature: -55℃ →+15℃ to +35℃ →+85 →+15℃ to +35℃<br>Duration: 30 → 2 to 3 → 30 →2 to 3 (Minutes)<br>5 cycles |
| 9. Humidity | Insulation resistance: 1 M ohms min. (High hujmidity)<br>Insulation resistance: 10 M ohms min. (Dry state) | 500 hours at 40℃, HR 90% to 95% |
| 10. Salt spray | Contact resistance: 60 m ohms max. | 5% water solution for 48 hours |

Note: Includes temperature rise caused by current flow.
Temperature range for mechanical operation : -25℃ to +60℃

## ■Materials

| Part | Material | Finish | Remarks |
|---|---|---|---|
| Insulator | PBT | Color: Black | UL94V-0 |
| Contact | Phosphor bronze | Contact area: Gold plated 1.27 μm<br>Termination area: Gold plated 0.03 μm<br>Under plate: Nickel plated 1μm | ———— |
| Shield | Brass | Tin reflow plated 1μm | ———— |
| Ground spring | Phosphor bronze | Tin reflow plated 1μm | ———— |

## ■Ordering information

**TM24 R SG - 5A - 8 8**
❶ ❷ ❸ ❹ ❺ ❻

| | | |
|---|---|---|
| ❶ | Series name | : TM24 |
| ❷ | Connector type | : R... Jack |
| ❸ | Shell type | : SG... Separate ground spring –outer shell |
| ❹ | Jack type | : 5A... Right-angle dip |
| ❺ | Jack opening code | : 8... 8 contacts |
| ❻ | Number of inserted contact | : 8... 8 contacts |

# ■Modular Jack Connectors

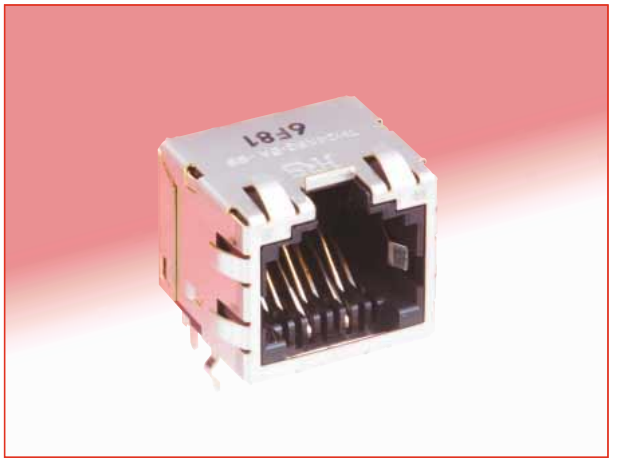

| Part number | CL No. | RoHS |
|---|---|---|
| TM24RSG-5A-88 | 222-2946-7-00 | YES |

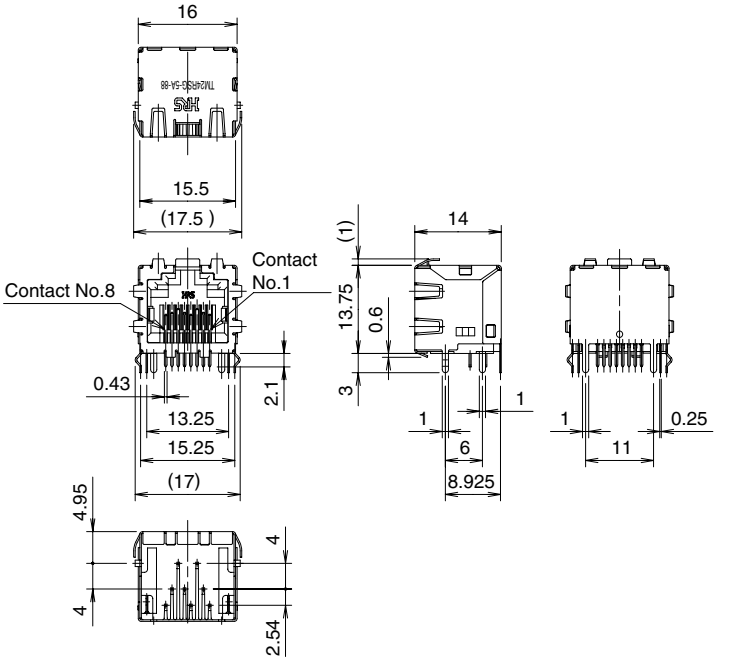


## ◆Recommended PCB mounting pattern

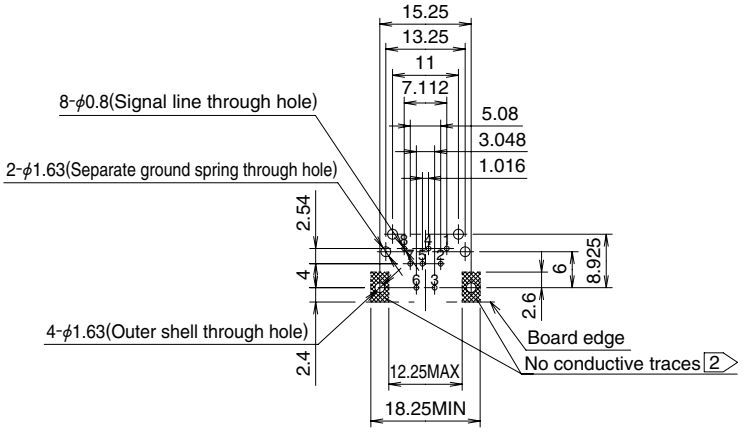


## ◆Recommended panel cutout

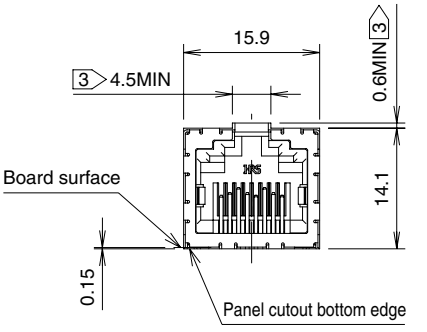


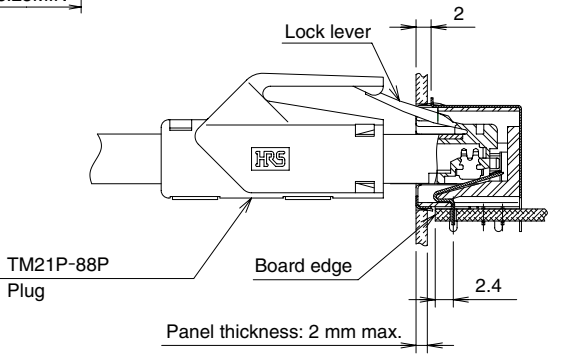


＊ Precautions and recommendations for board and panel design

1 . Recommended board thickness: 1.6 mm.

2. No conductive traces in the crosshatched areas.

3. Make sure that the panel cutout has enough clearance to assure free operation of the lock lever of the mating plug.

4 . Make sure that the panel cutout bottom edge is 0.15 mm below the board-mounting surface.

5 . Connector can be cleaned with isopropyl alcohol (IPA) at room temperature.

## ■Signal Integrity Data

These are the representative values of the electrical performance demanded for modular connectors according to IEEE802.3-an (10GBASE-T).

### ●Measurement Outline Drawing

Measurement point : FEXT → Sdd21
Return Loss → Sdd11
Impedance Balance → Scd11

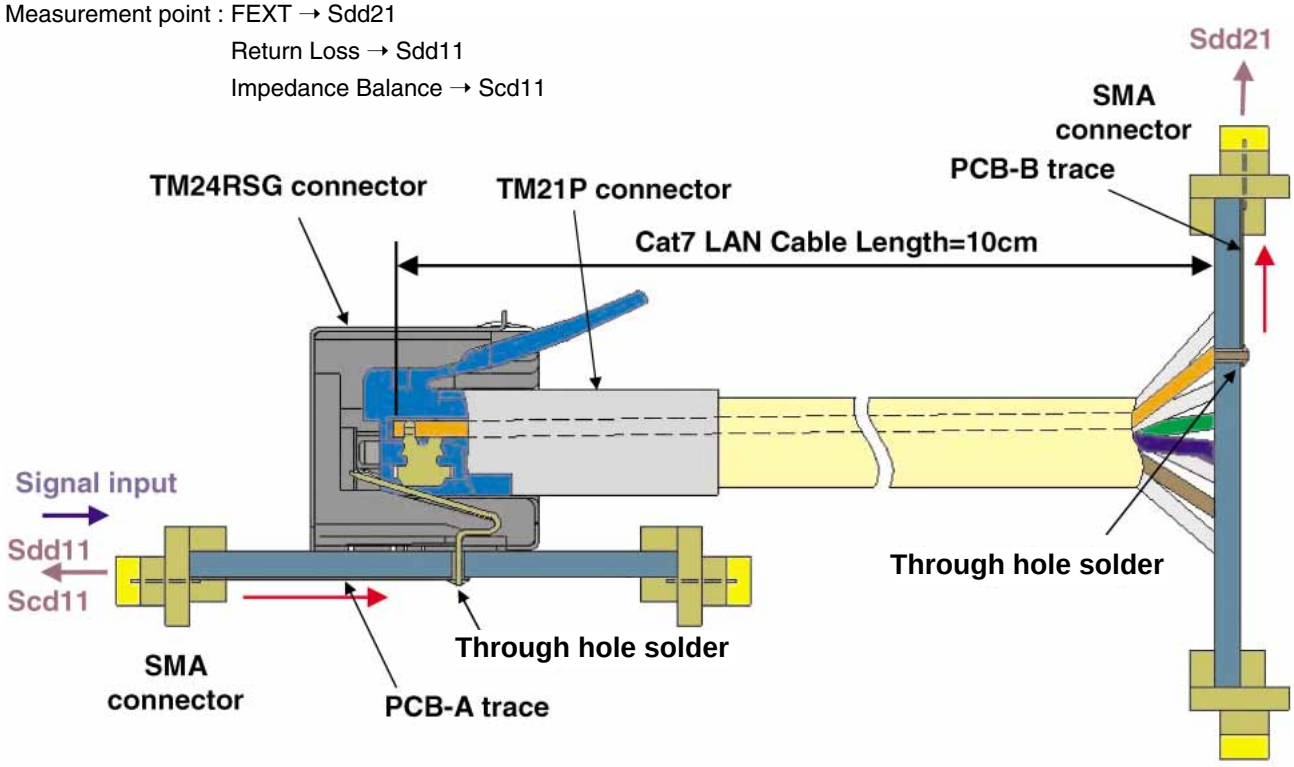


### ●FEXT Data

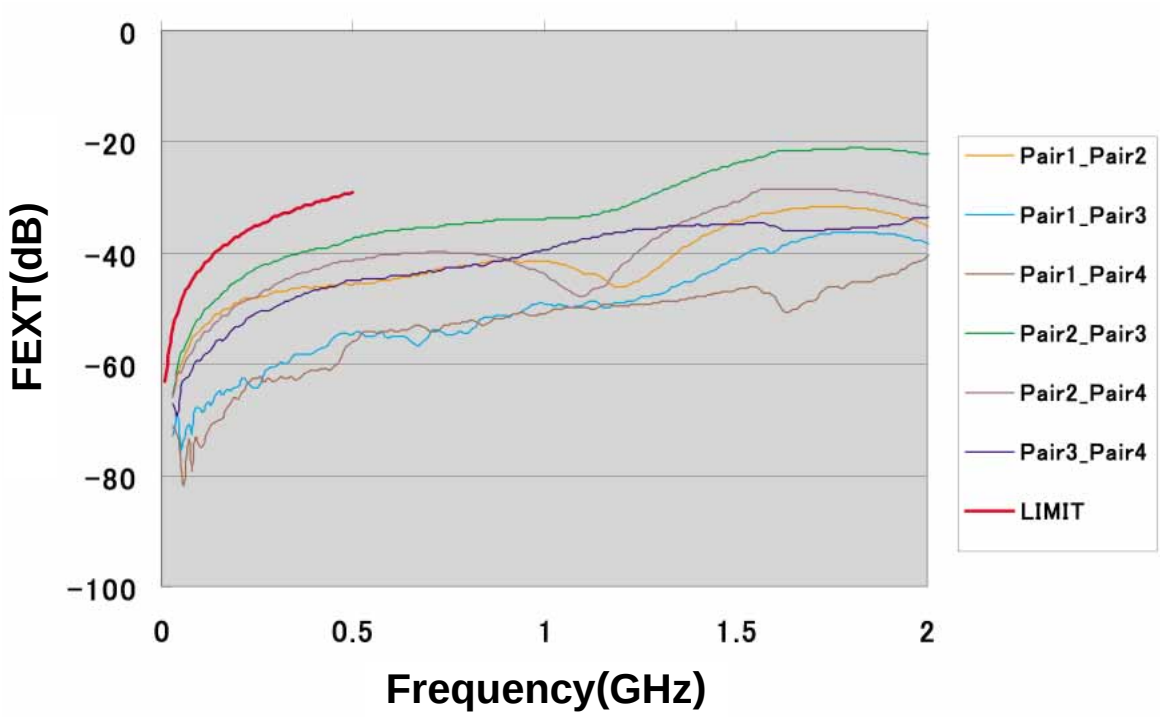

●Return Loss Data

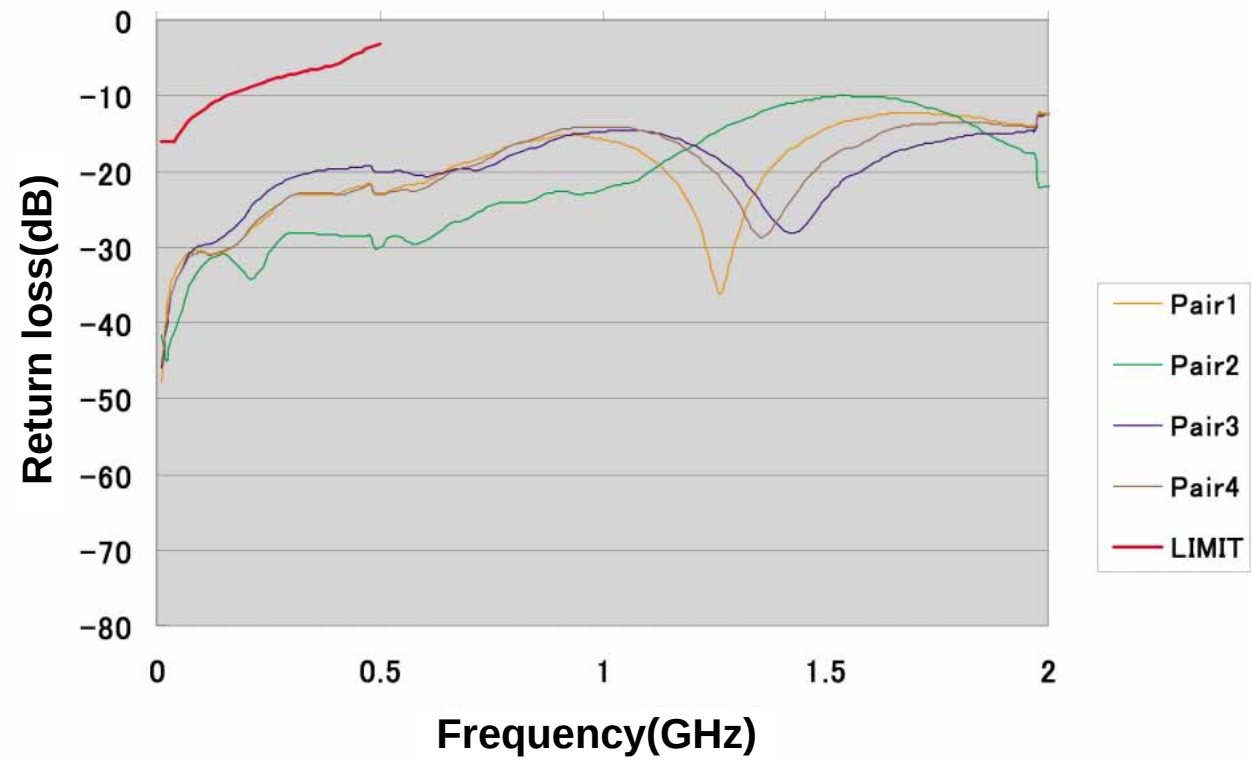


●Impedance Balance Data