Model 589

Stratum 3

Temperature Compensated Crystal Oscillator

FEATURES

- **HCMOS Output**
- **Optional Voltage Control for Frequency Tuning [VCTCXO]**
- 7.0mm x 5.0mm Surface Mount Package
- Frequency Range 5 – 52 MHz
- Fundamental Crystal Design
- Operating Voltage, +3.0Vdc, +3.3Vdc or +5.0Vdc
- Overall Frequency Stability ±4.6ppm
- Operating Temperature to -40°C to +85°C
- Tape & Reel Packaging Standard, EIA-418
- **RoHS/Green Compliant [6/6]**

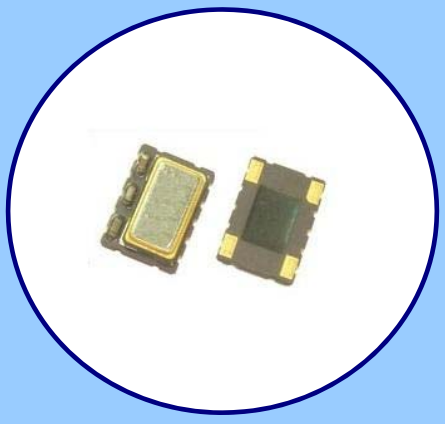

APPLICATIONS

The Model 589, a quartz based analog TCXO with HCMOS output and optional frequency tuning, is suitable for applications requiring Stratum 3 performance such as base stations, Microcells, Femtocells, 1588 and Synchronous Ethernet timing, wireless communications, test and measurement.

ORDERING INFORMATION

589 □ □ □ □ □ □ □ □ □

SUPPLY VOLTAGE

R = +3.0Vdc
L = +3.3Vdc
S = +5.0Vdc

FREQUENCY

Product Frequency Code [3 digits]

Refer to document 016-1454-0, Frequency Code Tables.

FREQUENCY STABILITY *

X1 = ±0.14ppm [1]
X2 = ±0.28ppm

PACKAGING OPTIONS

T - 1k pcs./reel

FREQUENCY TUNING [AFC]

T = No AFC [TCXO]
A = ±5ppm - ±8ppm [VCTCXO]

OPERATING TEMPERATURE RANGE

C = -20°C to +70°C
I = -40°C to +85°C

* Frequency vs. Temperature Only

1] Only available with temperature range code "C".

Not all performance combinations and frequencies may be available.
Contact your local CTS Representative or CTS Customer Service for availability.

ELECTRICAL CHARACTERISTICS

	PARAMETER	SYMBOL	CONDITIONS	MIN	TYP	MAX	UNIT
ELECTRICAL PARAMETERS	Maximum Supply Voltage	V_{CC}	-	-0.6	-	6.0	V
	Maximum Control Voltage	V_C	-	-0.5	-	V_{CC}	V
	Storage Temperature	T_{STG}	-	-40	-	+100	°C
	Operating Temperature	T_A	-		+25		°C
	Order Code 'C'			-20		+70	
	Order Code 'I'			-40		+85	
	Frequency Range	f_O	-	5	-	52	MHz
	Supply Voltage	V_{CC}	±5%				V
	Order Code 'R'			2.85	3.0	3.15	
	Order Code 'L'			3.14	3.3	3.47	
	Order Code 'S'			4.75	5.0	5.25	
	Supply Current	I_{CC}		-	-	6.0	mA
	Frequency Stability						
	Overall Frequency Stability	$\Delta f/f_O$	Reference to f_O, Including 20 years aging	-	-	4.60	± ppm
	vs. Initial Calibration		@ +25°C, at time of shipment	-	-	1.00	
	vs. Operating Temperature	$\Delta f/f_{25}$	[Fmax. - Fmin.]/2, over -40°C to +85°C	-	-	0.28	
			[Fmax. - Fmin.]/2, over -20°C to +70°C	-	-	0.14	
	vs. Supply Voltage		±5% change @ +25°C	-	-	0.40	
	vs. Load		±5% change	-	-	0.10	
	vs. Aging		20 years @ +40°C	-	-	2.80	
	Holdover	$\Delta f/f_O$	[Fmax. - Fmin.]/2, over 24 hours	-	-	0.32	
	Control Voltage	V_C	-	0.5	1.5	2.5	V
	Frequency Tuning [VCTCXO Only]	-	V_C = 1.5V ±1.0V, monotonic positive		5 - 8		± ppm
	V_C Input Impedance	ZV_C	-	100	-	-	kOhm
	Output Waveform		HCMOS				
	Output Voltage Levels						
	Logic '1' Level	V_{OH}	HCMOS Load	0.9*V_{CC}	-	-	V
	Logic '0' Level	V_{OL}	HCMOS Load	-	-	0.1*V_{CC}	
	Output Load	C_L	-	-	-	15	pF
	Rise and Fall Time	T_R, T_F	@ 20% - 80% Levels	-	3.0	6.0	ns
	Output Duty Cycle	SYM	@ 50% Level	45	-	55	%
	Start Up Time	T_S	-	-	-	2	ms
	Enable Function						
	Enable Input Voltage	V_{IH}	Pin 8 Logic '1', Output Enabled	0.7*V_{CC}	-	-	V
	Disable Input Voltage	V_{IL}	Pin 8 Logic '0', Output Disabled [High Imp]	-	-	0.3*V_{CC}	
	Phase Noise [1]	-	-				dBc/Hz

Notes:

1. Phase Noise performance may vary based on output frequency. See example plot at 10 MHz below.

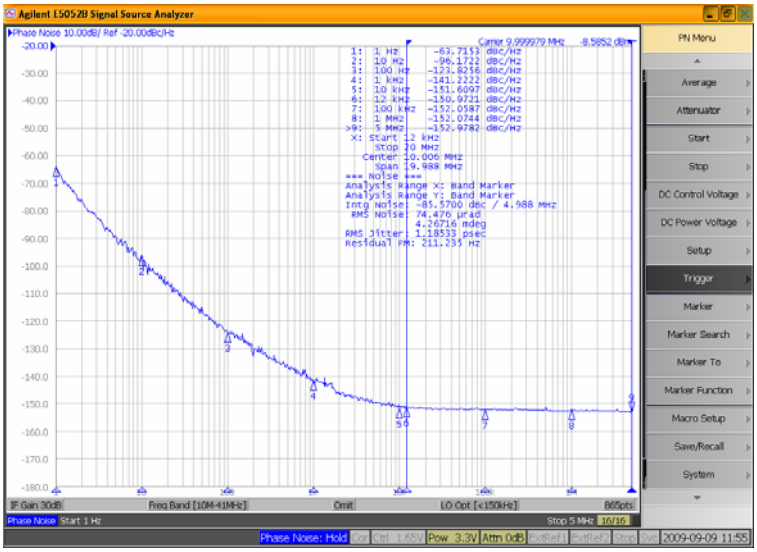

TEST CIRCUIT – HCMOS LOAD

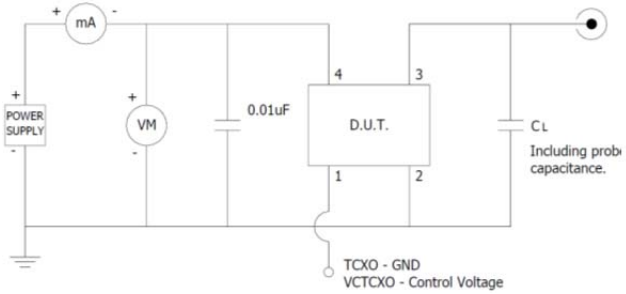

MECHANICAL SPECIFICATIONS

PACKAGE DRAWING

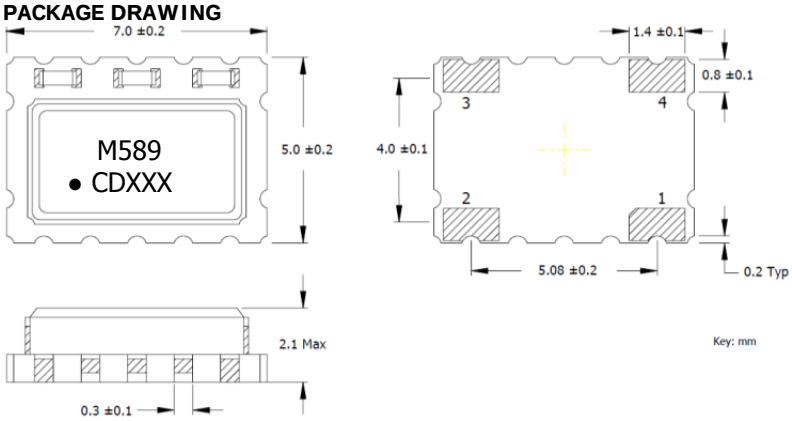

MARKING INFORMATION

1. M589 – CTS Model Series.
2. ● – Pin 1 identifier.
3. C – CTS identifier.
4. D – Date code. See Table II for codes.
6. xxx – Frequency Code.

Refer to document 016-1454-0, Frequency Code Tables.

NOTES

1. DO NOT make connections to non-labeled pins or castellations as they may have internal connections used in the manufacturing process.
2. Termination pads (e4); barrier plating is nickel [Ni] with gold [Au] flash plate.
3. Reflow conditions per JEDEC J-STD-020, 260°C maximum.
4. MSL = 1.

SUGGESTED SOLDER PAD GEOMETRY

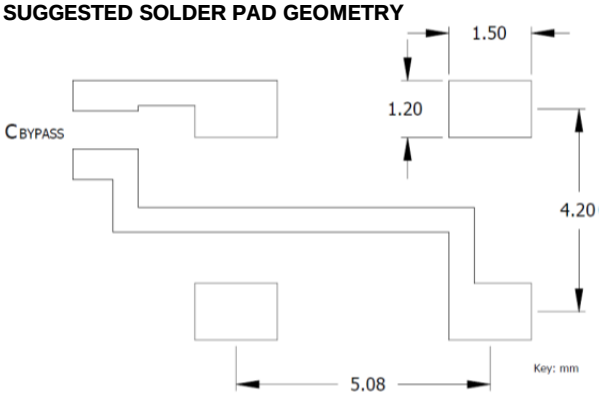

D.U.T. PIN ASSIGNMENTS

PIN	SYMBOL	DESCRIPTION
1	V_C	Control Voltage – VCTCXO [Note 1]
		GND - TCXO
2	GND	Circuit & Package Ground
3	Output	HCMOS Output
4	V_{CC}	Supply Voltage

NOTES

1. Connect to ground for TCXO [no AFC] option.

TABLE II – DATE CODE

YEAR \ MONTH					JAN	FEB	MAR	APR	MAY	JUN	JUL	AUG	SEP	OCT	NOV	DEC
2001	2005	2009	2013	2017	A	B	C	D	E	F	G	H	J	K	L	M
2002	2006	2010	2014	2018	N	P	Q	R	S	T	U	V	W	X	Y	Z
2003	2007	2011	2015	2019	a	b	c	d	e	f	g	h	j	k	l	m
2004	2008	2012	2016	2020	n	p	q	r	s	t	u	v	w	x	y	z

PACKAGING INFORMATION [reference]
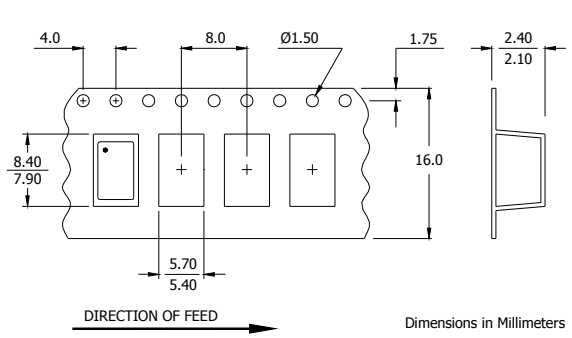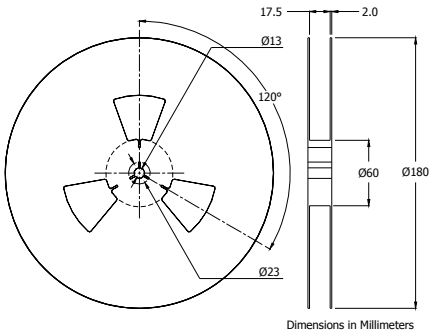
Device quantity is 1k pcs. maximum per 180mm reel.