THIS DRAWING IS UNPUBLISHED. RELEASED FOR PUBLICATION -,- .
© COPYRIGHT - By - ALL RIGHTS RESERVED.

LOC	DIST
AD	00

REVISIONS

P	LTR	DESCRIPTION	DATE	DWN	APVD
	A1	REVISED PER ECO-12-020403	21NOV12	KH	PO

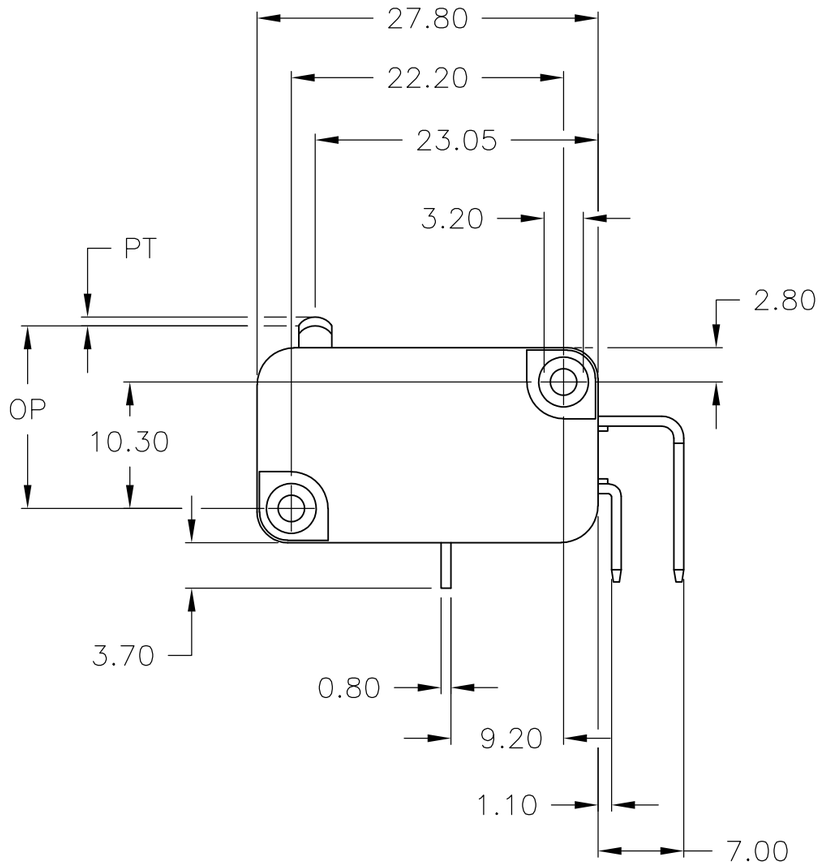

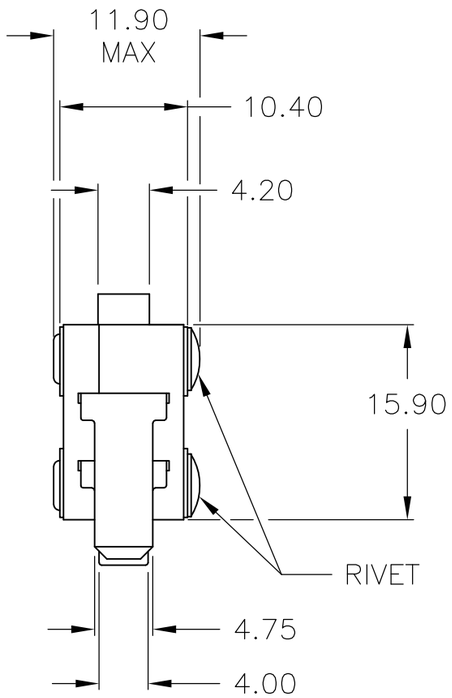

SPECIFICATIONS:

MATERIAL OF BASE: P.B.T.
MATERIAL OF COVER: P.B.T.
RATING: 10A 250VAC MAX
INSULATION RESISTANCE: 100M MIN(@500 VDC)
DIELECTRIC STRENGTH: 2000 VAC FOR 60 SECONDS
OF: 200g MAX
RF: 50g MIN
PT: 1.4mm MAX
OT: 0.8mm MIN
MD: 0.5mm MAX
FP: 15.7mm MAX
OP: 14.7±0.5mm

NOTE:
1. PARTS TO BE RoHS COMPLIANT

1517266-1
PART NUMBER

THIS DRAWING IS A CONTROLLED DOCUMENT.

DIMENSIONS: mm

TOLERANCES UNLESS OTHERWISE SPECIFIED:
0 PLC ± -
1 PLC ± -
2 PLC ± 0.20
3 PLC ± -
4 PLC ± -
ANGLES ± -

MATERIAL -
FINISH -

DWN KIRAN HOLAL 07DEC11
CHK OTT PETER 07DEC11
APVD OTT PETER 07DEC11
PRODUCT SPEC —
APPLICATION SPEC —
WEIGHT —

TE Connectivity

NAME MICRO SWITCH

SIZE	CAGE CODE	DRAWING NO	RESTRICTED TO
A3	00779	C-1517266	—

CUSTOMER DRAWING

SCALE	SHEET	REV
2:1	1 OF 1	A1