PRELIMINARY

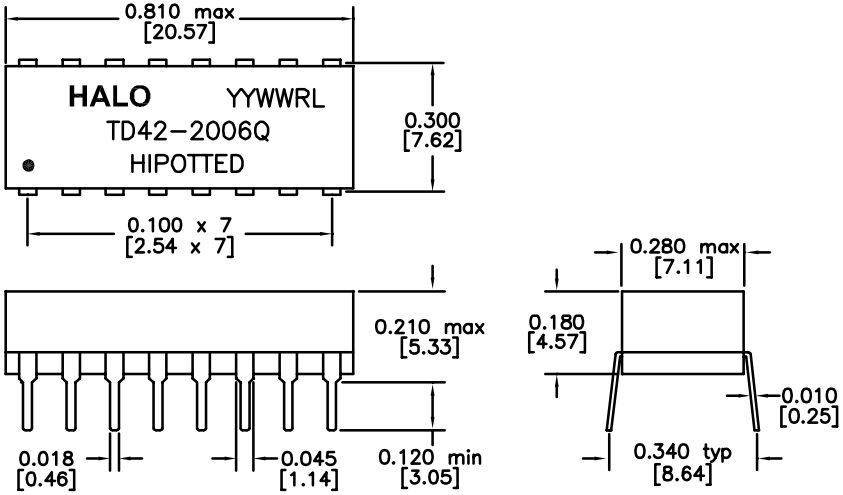

DIMENSIONS : Inch[mm]

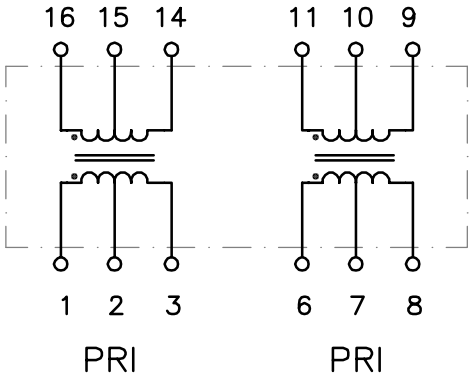

RoHS COMPLIANT

PART NO. : TD42-2006QRL

16PIN DIP ISOLATION MODULE

MEET REQUIREMENTS OF 10BASE-T FILTERLESS SOLUTION

LEAD-FREE/RoHS COMPLIANT

COMPATIBLE TO LEAD-FREE WAVE SOLDERING PROCESS FOR THROUGH HOLE COMPONENTS

OPERATING TEMPERATURE -40/+85°C

ELECTRICAL SPECIFICATIONS @25° C

TURNS RATIO	
P1-3:P16-14	1CT:1CT ±3%
P6-8:P11-9	1CT:1.41CT ±3%
OCL (PRI)	200μH typ
DCR (PRI)	0.4Ω max
Cw/w	15pF max
LL (PRI)	0.4μH max
ISOLATION	2000Vrms

HALO/PBL	TITLE	16PIN ISOLATION MODULE	SIGNATURES	DATE	REV.	DESC.	DATE
	FOR	10BASE-T	DRAWN PETER LU	7/29/05	A		
	PART NO.	TD42-2006QRL	CHECKED				
CALIFORNIA, USA KOWLOON, HONG KONG SINGAPORE	SCALE NONE	PAGE 1 OF 1	APPROVED				
			FILE TD42QRL.DWG				