CUSTOMER DRAWING

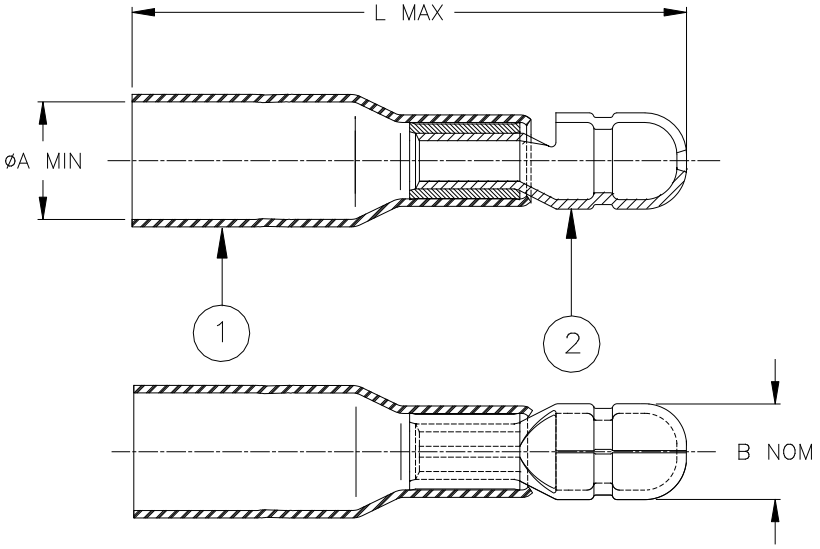

Product Name	Product Dimensions				Wire Dimensions		
	øA min	B nom	L max	Color (1)	Size Range mm^2 (AWG)	øG min	øG max
B-106-7401	4.0 [0.160]	4.0 [0.160]	33.0 [1.300]	Red	0.5 - 1.0 (AWG 22-18)	1.4 [0.055)	4.0 [0.160]
B-106-7502	4.6 [0.180]	5.0 [0.197]	34.0 [1.339]	Blue	1.5 - 2.5 (AWG 16-14)	2.0 [0.080)	4.6 [0.180]

MATERIALS

1. INSULATION SLEEVE: Heat-shrinkable, transparent color (1), radiation cross-linked modified polyamide with thermoplastic adhesive coating inside.
2. BULLET TERMINAL: Tin-plated brass.
   BASE METAL: C260 (C26000) or C268 Brass.
   PLATING: Tin-plated per ASTM B545, Class A.

APPLICATION

1. These controlled crimp devices are designed to terminate a tin-plated or bare copper stranded wire having an insulation rated for at least 75➡C to a bullet terminal. It will provide a splash proof and strain relief connection.
   UL listed wire connector 91J4.
2. Temperature range: -55➡C to +125➡C.
3. For application tooling and installation, see RPIP-684-00.

For best results, prepare the wire as shown:

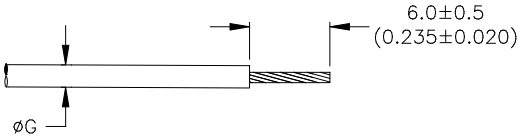

DuraSeal is a trademark of Tyco Electronics Corporation.

			Raychem Devices	TITLE: DURASEAL BULLET TERMINAL		
Unless otherwise specified dimensions are in millimeters. [Inches dimensions are shown in brackets]				DOCUMENT NO.: B-106-7XXX		
TOLERANCES: 0.00 N/A 0.0 N/A 0 N/A	ANGLES: N/A ROUGHNESS IN MICRON	Tyco Electronics reserves the right to amend this drawing at any time. Users should evaluate the suitability of the product for their application.		REV.: B	DATE: 22-Feb-2017	
DRAWN BY: M. FORONDA	CAGE CODE: 06090	REPLACES: D060180	DCR NUMBER: ECO-17-002136	SCALE: ---	SIZE: A	SHEET: 1 of 1

© 2006-2017 TE Connectivity Corporation. All rights reserved.
If this document is printed it becomes uncontrolled. Check for the latest revision.