# Type RR Series

## Key Features

- Metal film technology
- Non-flammable
- High power in small package
- High stability, reliability and uniformity characteristics
- Good performance for pulse applications
- Defined interruption behavior (fusing time)
- Various forming styles

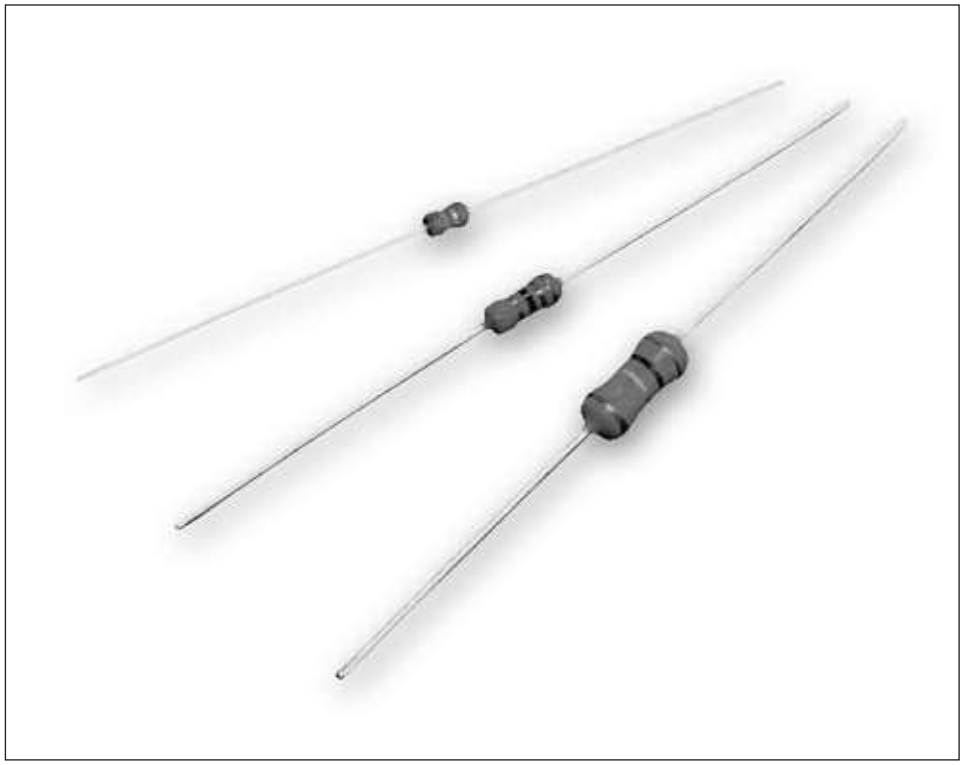

The RR Series is manufactured by depositing a homogeneous film of metal alloy onto a high-grade ceramic body. After a helical groove has been cut in the resistive layer, tinned connecting wires of electrolytic copper are welded to the end-caps. The resistors are coated with a red, non-flammable lacquer, which provides electrical, mechanical and climatic protection. The coating is resistant to all cleaning solvents in accordance with MIL-STD-202, method 215 and IEC 60068-2-45.

## Characteristics - Electrical

| | RR01 | | RR02 | | RR03 | |
|---|---|---|---|---|---|---|
| **Resistance Range:** | 0.22Ω-1MΩ | 10R - 1M0 | 0.33Ω-1MΩ | 10R - 1M0 | 0.33Ω-1MΩ | 10R - 1M0 |
| **Tolerance and Series:** | ±5%, E24 | ±1%, E24/E96 | ±5%, E24 | ±1%, E24/E96 | ±5%, E24 | ±1%, E24/E96 |
| **Maximum Dissipation: at $T_{amb.}$ = 70°C** | 1W | | 2W | | 3W | |
| **Thermal Resistance:** | 120k/W | | 80k/W | | 65k/W | |
| **Limiting Voltage (DC or RMS):** | 350V | | 500V | | 750V | |
| **Rated Voltage [1]:** | $P_n$ x R | | | | | |
| **Temperature Coefficient:** | ±300ppm/°C | | | | | |
| **Basic Specification:** | IEC 60115-1 and 60115-4 | | | | | |
| **Climatic Category (IEC 60068):** | 55/155/56 | | | | | |

| **Stability ΔR/R Max. After:** | For tolerance 5% | For tolerance 1% |
|---|---|---|
| **Load** | ±5.0% +0.1Ω | ±1.0% +0.1Ω |
| **Climatic Tests** | ±3.0% +0.1Ω | ±1.0% +0.1Ω |
| **Resistance to Soldering Heat** | ±1.0% +0.05Ω | ±0.5% +0.05Ω |

[1] Maximum rated voltage is the limiting voltage



Dimensions are in millimeters and inches unless otherwise specified. Values in brackets are standard equivalents.

Dimensions are shown for reference purposes only. Specifications subject to change.

For email, phone or live chat, go to: **te.com/help**

# Type RR Series

## Dimensions

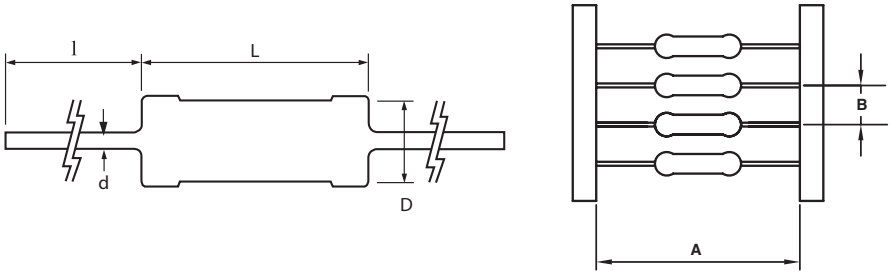


| | A ±1 | B | L ±1 | øD ±0.5 | ød ±0.1 | l ±3 |
|---|---|---|---|---|---|---|
| **RR01** | 52 | 5 ±0.5 | 6.8 | 2.6 | 0.65 | 30 |
| **RR02** | 52 | 5 ±0.5 | 9.0 | 3.5 | 0.8 | 30 |
| **RR03** | 63 | 10 ±1 | 15.0 | 5.0 | 0.8 | 30 |

## Mounting

The resistors are suitable for processing on automatic insertion equipment, cutting and bending machines.

## Derating Curve

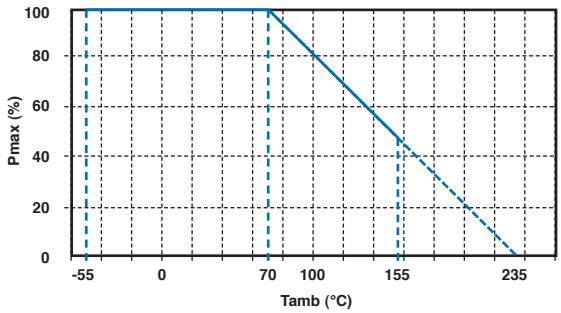


Maximum dissipation (Pmax) in percentage of rated power as a function of ambient temperature (Tamb)

## Fusing Characteristics

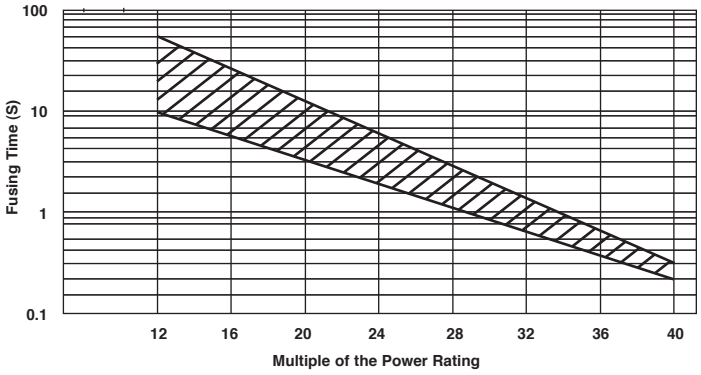




Dimensions are in millimeters and inches unless otherwise specified. Values in brackets are standard equivalents.

Dimensions are shown for reference purposes only. Specifications subject to change.

For email, phone or live chat, go to: **te.com/help**

## Type RR Series

### Pulse Characteristics - 1W

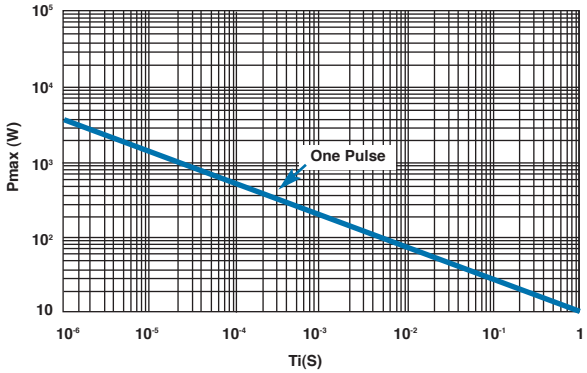


Maximum permissible peak pulse power (Pmax) as a function of pulse duration (Ti)

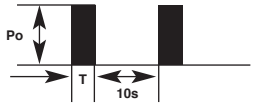


Condition Test: Resistance change ≤±5% with pulse 1000 cycles as like the figure (reference only).

1. Added power and added voltage are within the lower teritory of this graph.
2. Added in normal temperature and humidity.

### 2W

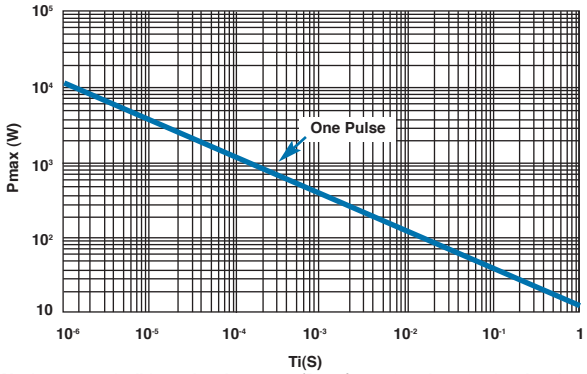


Maximum permissible peak pulse power (Pmax) as a function of pulse duration (Ti)

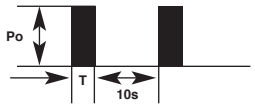


Condition Test: Resistance change ≤±5% with pulse 1000 cycles as like the figure (reference only).

1. Added power and added voltage are within the lower teritory of this graph.
2. Added in normal temperature and humidity.

### 3W

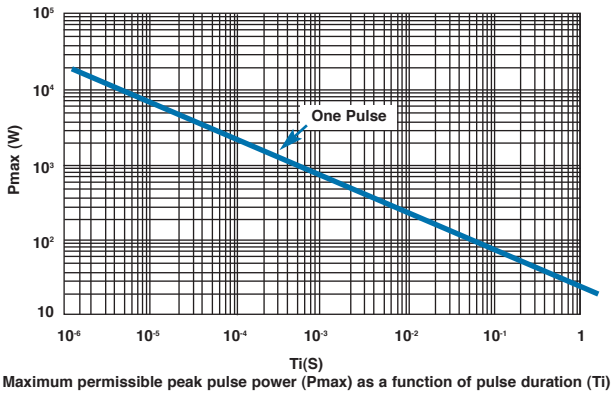


Maximum permissible peak pulse power (Pmax) as a function of pulse duration (Ti)

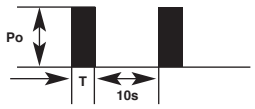


Condition Test: Resistance change ≤±5% with pulse 1000 cycles as like the figure (reference only).

1. Added power and added voltage are within the lower teritory of this graph.
2. Added in normal temperature and humidity.

## Marking

The nominal resistance and tolerance are marked on the resistor using four or five coloured bands in accordance with IEC publication 60062 “Colour code for fixed resistors”. Standard values of nominal resistance are taken from the E24/E96 series for resistors with a tolerance of ±5% or ±1%. The values of the E24/E96 series are in accordance with IEC publication 60063.



Dimensions are in millimeters and inches unless otherwise specified. Values in brackets are standard equivalents.

Dimensions are shown for reference purposes only. Specifications subject to change.

For email, phone or live chat, go to: **te.com/help**

# Type RR Series

## Packaging - Ammo Pack Boxed

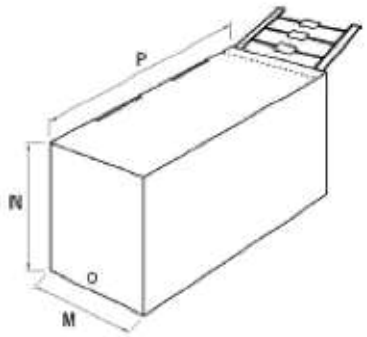


| | M | N | P | Quantity |
|---|---|---|---|---|
| **RR01** | 75 | 100 | 255 | 5000 |
| **RR02** | 75 | 55 | 255 | 1000 |
| **RR03** | 100 | 110 | 265 | 1000 |

## Packaging - Tape and Reeled

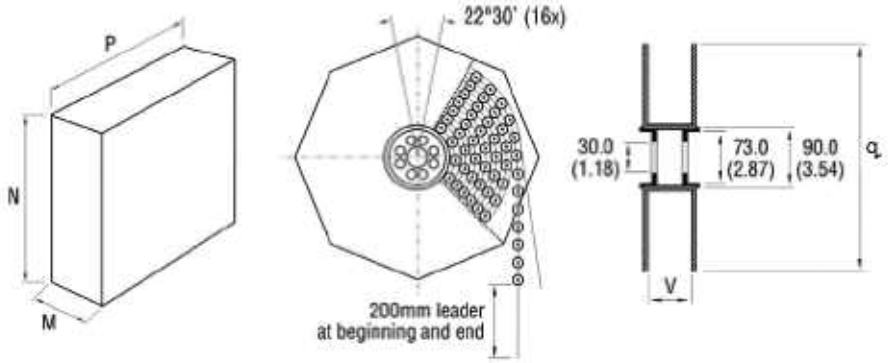


| | Taping | M | N | P | q | V | Quantity pcs. |
|---|---|---|---|---|---|---|---|
| **RR01** | 52 ±1.0 | 80 | 295 | 295 | 310 | 75 | 5000 |
| **RR02** | 52 ±1.0 | 80 | 295 | 295 | 310 | 75 | 2500 |
| **RR03** | 63 ±1.0 | 80 | 295 | 295 | 310 | 75 | 1000 |

## How to Order

| RR | 01 | J | 1K0 | TR |
|---|---|---|---|---|
| **Common Part** | **Power Rating** | **Tolerance** | **Value** | **Packaging** |
| RR - Power Resistor | 01 - 1 Watt<br>02 - 2 Watts<br>03 - 3 Watts | J - 5%<br>F - 1% | 100 ohm (100 ohms) 100R<br>1K0 (1000 ohms) 1K0<br>100 K ohm (100,000 ohms) 100K | TR - Reeled<br>TB - Ammo Pack |

TE Connectivity and the TE connectivity (logo) are trademarks.
Other logos, product and Company names mentioned herein may be trademarks of their respective owners.

While TE has made every reasonable effort to ensure the accuracy of the information in this datasheet, TE does not guarantee that it is error-free, nor does TE make any other representation, warranty or guarantee that the information is accurate, correct, reliable or current. TE reserves the right to make any adjustments to the information contained herein at any time without notice. TE expressly disclaims all implied warranties regarding the information contained herein, including, but not limited to, any implied warranties of merchantability or fitness for a particular purpose. The dimensions in this datasheet are for reference purposes only and are subject to change without notice. Specifications are subject to change without notice. Consult TE for the latest dimensions and design specifications.