AS85049/7 and MS3189B
45° Environmental Backshell

Glenair®

CONNECTOR DESIGNATOR:

A	AS50151 Series AS34001 MIL-DTL-26482 Series II AS81703 Series III MIL-DTL-83723 Series I & III 40M39569, DEF 5326-3, EN 2997 EN 3646, ESC 10, ESC 11, LN 29504 NFC93422 Series HE302 PAN 6432-1, PAN 6432-2, PATT 602

Basic Part Number		Dash Number (Table II)
M85049/7	**-**	**21**	**N**

Finish / Material

B = Black Cadmium / Stainless Steel
N = Electroless Nickel / Aluminum
S = Passivated / Stainless Steel
W = 1,000 Hr. Cadmium Olive Drab over Electroless Nickel / Aluminum
X = Nickel Fluorocarbon Polymer / Aluminum
Y = Pure Dense Electrodeposited Aluminum / Aluminum
Z = Zinc Nickel, Black / Aluminum
XS = Nickel Fluorocarbon Polymer / Stainless Steel
YS = Pure Dense Electrodeposited Aluminum / Stainless Steel
ZS = Zinc Nickel, Black / Stainless Steel

Superseded Part Number

MS3189B 21 N

Basic Part No. | Dash No.

Finish
(Material is Aluminum Only)

A = Cadmium Olive Drab over Nickel
C = Cadmium Olive Drab
N = Electroless Nickel

APPLICATION NOTES

1. For complete dimensions see the applicable Military Specification.
2. Metric dimensions (mm) are in parentheses.
3. When maximum cable entry is exceeded, Style 2 will be supplied.
4. Cable Range is defined as the accommodation range for the wire bundle or cable. Dimensions shown are not intended for inspection criteria.
5. Approximate chain lengths: Dash No. 01-12 = 5.0 (127.0); Dash No. 13-29 = 6.0 (152.4).

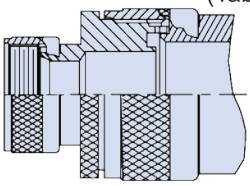

STYLE 2

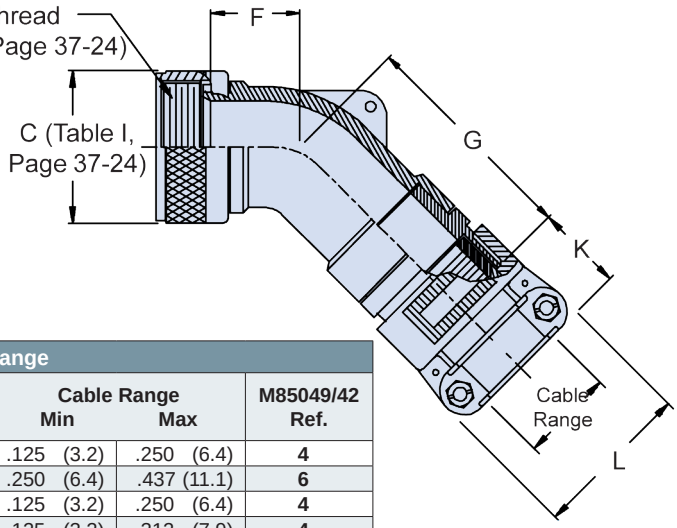

TABLE II: Dash Number and Cable Range

Dash No.	Shell Size	F Max	G ± .125 (3.2)	K Ref.	L Max	Cable Range Min	Cable Range Max	M85049/42 Ref.
1	03	.688 (17.5)	1.852 (47.0)	1.027 (26.1)	.957 (24.3)	.125 (3.2)	.250 (6.4)	4
2	03	1.500 (38.1)	1.972 (50.1)	1.027 (26.1)	1.145 (29.1)	.250 (6.4)	.437 (11.1)	6
3	08	.625 (15.9)	1.244 (31.6)	1.027 (26.1)	.957 (24.3)	.125 (3.2)	.250 (6.4)	4
4	10	.688 (17.5)	1.912 (48.6)	1.027 (26.1)	.957 (24.3)	.125 (3.2)	.312 (7.9)	4
5	10	.688 (17.5)	1.307 (33.2)	1.027 (26.1)	1.145 (29.1)	.250 (6.4)	.375 (9.5)	6
6	12	.750 (19.1)	1.972 (50.1)	1.027 (26.1)	.957 (24.3)	.125 (3.2)	.312 (7.9)	4
7	12	.750 (19.1)	1.972 (50.1)	1.027 (26.1)	1.145 (29.1)	.250 (6.4)	.437 (11.1)	6
8	12	.750 (19.1)	1.972 (50.1)	1.027 (26.1)	1.332 (33.8)	.350 (8.9)	.500 (12.7)	10
9	14	.812 (20.6)	2.062 (52.4)	1.027 (26.1)	1.145 (29.1)	.250 (6.4)	.437 (11.1)	6
10	14	.812 (20.6)	1.717 (43.6)	1.027 (26.1)	1.332 (33.8)	.350 (8.9)	.575 (14.6)	10
11	16	.906 (23.0)	2.172 (55.2)	1.027 (26.1)	1.145 (29.1)	.250 (6.4)	.437 (11.1)	6
12	16	.906 (23.0)	1.812 (46.0)	1.059 (26.9)	1.551 (39.4)	.500 (12.7)	.700 (17.8)	12
13	18	1.093 (27.8)	2.362 (60.0)	1.027 (26.1)	1.332 (33.8)	.350 (8.9)	.625 (15.9)	10
14	18	1.093 (27.8)	2.000 (50.8)	1.156 (29.4)	1.770 (45.0)	.625 (15.9)	.779 (19.8)	16
15	20	1.093 (27.8)	2.362 (60.0)	1.027 (26.1)	1.332 (33.8)	.350 (8.9)	.625 (15.9)	10
16	20	1.093 (27.8)	2.000 (50.8)	1.156 (29.4)	1.770 (45.0)	.625 (15.9)	.904 (23.0)	16
17	22	1.188 (30.2)	2.512 (63.8)	1.059 (26.9)	1.551 (39.4)	.500 (12.7)	.750 (19.1)	12
18	22	1.188 (30.2)	2.155 (54.7)	1.375 (34.9)	2.113 (53.7)	.875 (22.2)	1.029 (26.1)	20
19	24	1.188 (30.2)	2.512 (63.8)	1.059 (26.9)	1.551 (39.4)	.500 (12.7)	.750 (19.1)	12
20	24	1.188 (30.2)	2.093 (53.2)	1.375 (34.9)	2.113 (53.7)	.875 (22.2)	1.144 (29.1)	20
21	28	1.312 (33.3)	2.500 (63.5)	1.156 (33.7)	1.770 (45.0)	.625 (15.9)	.937 (23.8)	16

Table Continued on Page B-22

Dimensions in inches (millimeters) and are subject to change without notice.

© 2013 Glenair, Inc. U.S. CAGE Code 06324 Printed in U.S.A.

AS85049/7 and MS3189B
45° Environmental Backshell

TABLE II: Dash Number and Cable Range (Continued From Page B-21)

Dash No.	Shell Size	F Max	G ± .125 (3.2)	K Ref.	L Max	Cable Range Min	Cable Range Max	M85049/42 Ref.
22	28	1.312 (33.3)	2.218 (56.3)	1.500 (38.1)	2.363 (60.0)	1.000 (25.4)	1.375 (34.9)	24
23	32	1.375 (34.9)	2.662 (67.6)	1.156 (29.4)	1.770 (45.0)	.625 (15.9)	.937 (23.8)	16
24	32	1.375 (34.9)	2.662 (67.6)	1.375 (34.9)	2.113 (53.7)	.875 (22.2)	1.250 (31.8)	20
25	32	1.375 (34.9)	2.312 (58.7)	1.781 (45.2)	2.770 (70.4)	1.250 (31.8)	1.625 (41.3)	28
26	36	1.406 (35.7)	2.752 (69.9)	1.156 (29.4)	1.770 (45.0)	.625 (15.9)	.937 (23.8)	16
27	36	1.406 (35.7)	2.752 (69.9)	1.500 (38.1)	2.363 (60.0)	1.000 (25.4)	1.375 (34.9)	24
28	36	1.406 (35.7)	2.406 (61.1)	1.830 (46.5)	3.020 (76.7)	1.437 (36.5)	1.840 (46.7)	32
29	40	2.156 (54.8)	2.752 (69.9)	1.156 (29.4)	1.770 (45.0)	.625 (15.9)	.937 (23.8)	16
30	40	2.156 (54.8)	2.752 (69.9)	1.500 (38.1)	2.363 (60.0)	1.000 (25.4)	1.375 (34.9)	24
31	40	2.156 (54.8)	2.406 (61.1)	1.830 (46.5)	3.020 (76.7)	1.437 (36.5)	1.875 (47.6)	32
32	44	2.156 (54.8)	2.752 (69.9)	1.156 (29.4)	1.770 (45.0)	.625 (15.9)	.937 (23.8)	16
33	44	2.156 (54.8)	2.752 (69.9)	1.500 (38.1)	2.363 (60.0)	1.000 (25.4)	1.375 (34.9)	24
34	44	2.156 (54.8)	2.406 (61.1)	1.830 (46.5)	3.020 (76.7)	1.437 (36.5)	1.875 (47.6)	32
35	48	2.156 (54.8)	2.752 (69.9)	1.156 (29.4)	1.770 (45.0)	.625 (15.9)	.937 (23.8)	16
36	48	2.156 (54.8)	2.752 (69.9)	1.500 (38.1)	2.363 (60.0)	1.000 (25.4)	1.375 (34.9)	24
37	48	2.156 (54.8)	2.406 (61.1)	1.830 (46.5)	3.020 (76.7)	1.437 (36.5)	1.875 (47.6)	32
38	61	1.188 (30.2)	2.512 (63.8)	1.059 (26.9)	1.551 (39.4)	.500 (12.7)	.750 (19.1)	12
39	61	1.188 (30.2)	2.155 (54.7)	1.375 (34.9)	2.113 (53.7)	.875 (22.2)	1.184 (30.1)	20
40	16	.906 (23.0)	2.172 (55.2)	1.027 (26.1)	1.332 (33.8)	.350 (8.9)	.625 (15.9)	10
41	18	1.093 (27.8)	2.362 (60.0)	1.027 (26.1)	.957 (24.3)	.125 (3.2)	.312 (7.9)	4
42	18	1.093 (27.8)	2.362 (60.0)	1.027 (26.1)	1.145 (29.1)	.250 (6.4)	.437 (11.1)	6
43	20	1.093 (27.8)	2.362 (60.0)	1.027 (26.1)	1.145 (29.1)	.250 (6.4)	.437 (11.1)	6
44	22	1.188 (30.2)	2.512 (63.8)	1.027 (26.1)	.957 (24.3)	.125 (3.2)	.312 (7.9)	4
45	22	1.188 (30.2)	2.512 (63.8)	1.027 (26.1)	1.145 (29.1)	.250 (6.4)	.437 (11.1)	6
46	24	1.188 (30.2)	2.512 (63.8)	1.027 (26.1)	1.332 (33.8)	.350 (8.9)	.625 (15.9)	10
47	36	1.406 (35.7)	2.752 (69.9)	1.059 (26.9)	1.551 (39.4)	.500 (12.7)	.750 (19.1)	12
48	40	2.156 (54.8)	2.752 (69.9)	1.059 (26.9)	1.551 (39.4)	.500 (12.7)	.750 (19.1)	12
49*	10	1.500 (38.1)	1.972 (50.1)	1.027 (26.1)	1.145 (29.1)	.250 (6.4)	.437 (11.1)	6
50*	14	1.842 (46.8)	2.362 (60.0)	1.059 (26.9)	1.551 (39.4)	.500 (12.7)	.750 (19.1)	12
51*	16	1.938 (49.2)	2.512 (63.8)	1.156 (29.4)	1.770 (45.0)	.625 (15.9)	.937 (23.8)	16
52	18	1.093 (27.8)	2.362 (60.0)	1.059 (26.9)	1.551 (39.4)	.500 (12.7)	.750 (19.1)	12
53	61	1.188 (30.2)	2.512 (63.8)	1.156 (29.4)	1.770 (45.0)	.625 (15.9)	.937 (23.8)	16
54	20	1.093 (27.8)	2.362 (60.0)	1.059 (26.9)	1.551 (39.4)	.500 (12.7)	.750 (19.1)	12
55*	20	2.061 (52.3)	2.562 (65.1)	1.375 (34.9)	2.113 (53.7)	.875 (22.2)	1.250 (31.8)	20
56	22	1.188 (30.2)	2.512 (63.8)	1.027 (26.1)	1.332 (33.8)	.350 (8.9)	.625 (15.9)	10
57	22	1.188 (30.2)	2.512 (63.8)	1.156 (29.4)	1.770 (45.0)	.625 (15.9)	.937 (23.8)	16
58*	22	2.061 (52.3)	2.562 (65.1)	1.375 (34.9)	2.113 (53.7)	.875 (22.2)	1.250 (31.8)	20
59	24	1.188 (30.2)	2.512 (63.8)	1.156 (29.4)	1.770 (45.0)	.625 (15.9)	.937 (23.8)	16
60	28	1.312 (33.3)	2.562 (65.1)	1.059 (26.9)	1.551 (39.4)	.500 (12.7)	.750 (19.1)	12
61	28	1.312 (33.3)	2.562 (65.1)	1.375 (34.9)	2.113 (53.7)	.875 (22.2)	1.250 (31.8)	20
62	32	1.375 (34.9)	2.662 (67.6)	1.500 (38.1)	2.363 (60.0)	1.000 (25.4)	1.375 (34.9)	24
63	36	1.406 (35.7)	2.752 (69.9)	1.375 (34.9)	2.113 (53.7)	.875 (22.2)	1.250 (31.8)	20
64	36	1.406 (35.7)	2.752 (69.9)	1.781 (45.2)	2.770 (70.4)	1.250 (31.8)	1.625 (41.3)	28
65	40	2.156 (54.8)	2.752 (69.9)	1.375 (34.9)	2.113 (53.7)	.875 (22.2)	1.250 (31.8)	20
66	40	2.156 (54.8)	2.752 (69.9)	1.781 (45.2)	2.770 (70.4)	1.250 (31.8)	1.625 (41.3)	28
67	44	2.156 (54.8)	2.752 (69.9)	1.375 (34.9)	2.113 (53.7)	.875 (22.2)	1.250 (31.8)	20
68	44	2.156 (54.8)	2.752 (69.9)	1.781 (45.2)	2.770 (70.4)	1.250 (31.8)	1.625 (41.3)	28
69	48	2.156 (54.8)	2.752 (69.9)	1.375 (34.9)	2.113 (53.7)	.875 (22.2)	1.250 (31.8)	20
70	48	2.156 (54.8)	2.752 (69.9)	1.781 (45.2)	2.770 (70.4)	1.250 (31.8)	1.625 (41.3)	28
71*	12	1.654 (42.0)	2.173 (55.2)	1.027 (26.1)	1.332 (33.8)	.350 (8.9)	.625 (15.9)	10
72*	18	1.938 (49.2)	2.512 (63.8)	1.156 (29.4)	1.770 (45.0)	.625 (15.9)	.937 (23.8)	16
73*	24	2.061 (52.3)	2.562 (65.1)	1.375 (34.9)	2.113 (53.7)	.875 (22.2)	1.250 (31.8)	20
74	14	.812 (20.6)	2.062 (52.4)	1.027 (26.1)	.957 (24.3)	.125 (3.2)	.312 (7.9)	4
75	16	.906 (23.0)	2.172 (55.2)	1.027 (26.1)	.957 (24.3)	.125 (3.2)	.312 (7.9)	4

Dimensions in inches (millimeters) and are subject to change without notice.

© 2013 Glenair, Inc.
U.S. CAGE Code 06324
Printed in U.S.A.