ALF20, +85°C

Overview

The KEMET ALF20 press-fit capacitors eliminate the need for solder, and therefore, the associated production and quality issues. They are the next evolution of snap-in capacitors, providing reliable electrical contact and the same vibration performance as soldered snap-in terminals. The ALF20 offers high voltages up to 600 VDC, high ripple currents, good surge voltage capability, and a very long life performance.

Applications

The ALF20 capacitors are ideally suited for industrial and commercial applications, demanding high reliability and long life expectancy. Typical applications include frequency converters, advanced energy storage systems, and switch mode power supplies (SMPS).

Benefits

- Eliminates the manufacturing problems of soldering onto thick PCB copper tracks which act as heat-sinks
- Eliminates fractured solder joints/cold-solder
- Skipping the solder operation allows for easy insertion after the production washing process
- Capability to exchange components in the field

In addition to solving the solder issues, the ALF20 press-fit offers:

- Compact size
- Long life, up to 18,000 hours at +85°C (V_R, I_R applied)
- High ripple current
- High voltage up to 600 V
- Excellent surge voltage capability
- 35, 40, 45, and 50 mm diameters with 4 or 5 pin configuration
- Optimized designs available upon request

Click image above for interactive 3D content

Open PDF in Adobe Reader for full functionality

Part Number System

ALF20	C	392	EF	040	
Series	Termination	Capacitance Code (µF)	Size Code	Rated Voltage (VDC)	
Press-Fit Aluminum Electrolytic	See Termination Table	First two digits represent significant figures. Third digit specifies number of zeros.	See Dimension Table	035 = 35 040 = 40 063 = 63 100 = 100 200 = 200 250 = 250	350 = 350 400 = 400 450 = 450 500 = 500 550 = 550 600 = 600

© KEMET Electronics Corporation • KEMET Tower • One East Broward Boulevard
Fort Lauderdale, FL 33301 USA • 954-766-2800 • www.kemet.com

Performance Characteristics

Item	Performance Characteristics		
Capacitance Range	150 – 100,000 µF		
Rated Voltage	35 – 600 VDC		
Operating Temperature	−40 to +85°C		
Capacitance Tolerance	±20% at 100 Hz/+20°C		
Operational Lifetime	D (mm)	Rated Voltage and Ripple Current at +85°C (hours)	Rated Voltage at +85°C (hours)
	35	15,000	24,000
	40 – 50	18,000	29,000
End of Life Requirement	Δ C/C < ±10%, ESR < 2 x initial ESR value		
Shelf Life	2,000 hours at +85°C or 30,000 hours at +40°C 0 VDC		
Leakage Current	I = 0.006 CV or 6,000 µA (whichever is smaller)		
	C = rated capacitance (µF), V = rated voltage (VDC). Voltage applied for 5 minutes at +20°C.		
Vibration Test Specifications		Procedure	Requirements
	D ≤ 40 mm	0.75 mm displacement amplitude or 10 G maximum acceleration. Vibration applied for three 2-hour sessions at 10 – 500 Hz (Capacitor clamped by body).	No leakage of electrolyte or other visible damage. Deviations in capacitance from initial measurements must not exceed: Δ C/C < 5%
	D > 40 mm	0.35 mm displacement amplitude or 5 G maximum acceleration. Vibration applied for three 0.5-hour sessions at 10 – 55 Hz (Capacitor clamped by body).	
Standards	IEC 60384–4 long life grade 40/85/56		

Surge Voltage

Test Condition	Voltage (VDC)											
	35	40	63	100	200	250	350	400	450	500	550	600
≤ 30 second surge followed by a no load period of 330 seconds, 1,000 cycles at +85°C	40.25	46	72.5	115	230	288	385	440	495	550	605	660

Test Method & Performance

Endurance Life Test		
Conditions	Performance	
Temperature	+85°C	
Test Duration	2,000 hours	
Ripple Current	Rated ripple current in specified table	
Voltage	The sum of DC voltage and the peak AC voltage must not exceed the rated voltage of the capacitor	
Performance	**The following specifications will be satisfied when the capacitor is tested at +20°C:**	
Capacitance Change	≤ 160 V	Within 15% of the initial value
	≥ 160 V	Within 10% of the initial value
Equivalent Series Resistance	Does not exceed 200% of the initial value	
Leakage Current	Does not exceed leakage current limit	

Dimensions – Millimeters

Size Code	Dimensions in mm		Approximate Weight Grams
	D	L	
	−0/+1	±2	
DB	35	30	42
DC	35	35	50
DD	35	40	55
DE	35	45	65
DF	35	50	70
DG	35	55	75
DH	35	60	80
DL	35	80	105
EB	40	30	49
EC	40	35	57
ED	40	40	65
EE	40	45	80
EF	40	50	82
EG	40	55	95
EH	40	60	98
EJ	40	70	113
EL	40	80	131
EP	40	105	170
Note: Dimensions include sleeving			

Size Code	Dimensions in mm		Approximate Weight Grams
	D	L	
	−0/+1	±2	
FB	45	30	62
FC	45	35	72
FD	45	40	82
FE	45	45	92
FF	45	50	103
FG	45	55	113
FH	45	60	123
FL	45	80	164
FP	45	105	215
KB	50	30	75
KC	50	35	88
KD	50	40	100
KE	50	45	113
KF	50	50	126
KG	50	55	138
KH	50	60	151
KL	50	80	201
KP	50	105	264
Note: Dimensions include sleeving			

Termination Tables

Termination Code / Diameter (mm)	C (4 Pin) LL = 5.5 ±1	G (5 Pin) LL = 5.5 ±1
35	•	
40	•	•
45	•	•
50	•	•
Dimensions in mm		
Mounting: These capacitors are designed to be mounted by their terminals alone and may be used in any position. The dummy pins must be isolated.		

Style C

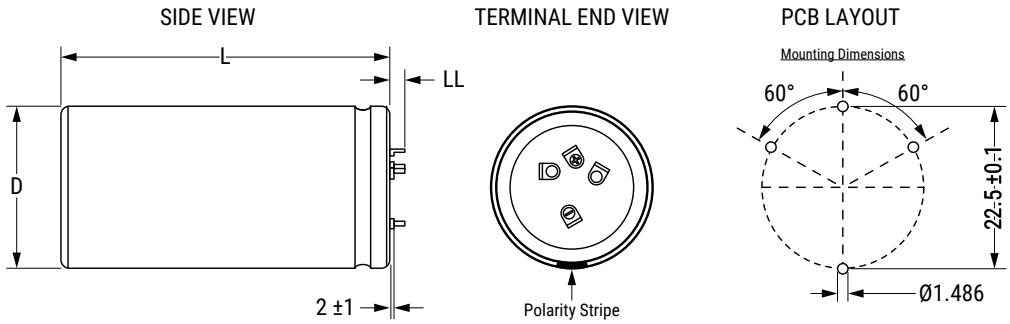

Style G

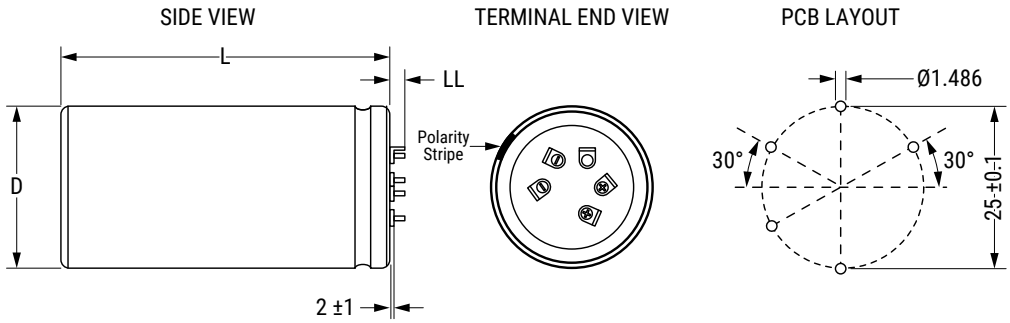

PCB Thickness: 1.57 mm Minimum	
DRILL	Ø1.613 ±0.025
COPPER THICKNESS	0.025 minimum
FINAL PLATED THROUGH-HOLE DIAMETER	Ø1.486 ±0.076
Pin Insertion Force: 125 N (28 lbf) maximum Pin Retention Force: 62 N (14 lbf) minimum	

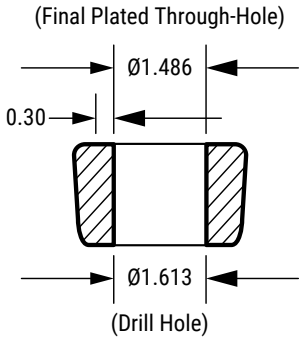

Shelf Life

The capacitance, ESR and impedance of a capacitor will not change significantly after extended storage periods, however, the leakage current will very slowly increase. KEMET products are particularly stable and allow a shelf life in excess of three years at 40°C. See sectional specification under each product for specific data.

Re-Age (Reforming) Procedure

Apply the rated voltage to the capacitor at room temperature for a period of one hour, or until the leakage current has fallen to a steady value below the specified limit. During re-aging, a maximum charging current of twice the specified leakage current or 5 mA (whichever is greater) is suggested.

Reliability

The reliability of a component can be defined as the probability that it will perform satisfactorily under a given set of conditions for a given length of time.

In practice, it is impossible to predict with absolute certainty how any individual component will perform. Therefore, we must utilize probability theory. It is also necessary to clearly define the level of stress involved (e.g., operating voltage, ripple current, temperature and time.) Finally, the meaning of satisfactory performance must be defined by specifying a set of conditions which determine the end of life of the component.

Reliability as a function of time, R(t), is normally expressed as: $R(t) = e^{-\lambda t}$, where R(t) is the probability that the component will perform satisfactorily for time t, and λ is the failure rate.

Failure Rate

The failure rate is the number of components failing per unit of time. The failure rate of most electronic components follows the characteristic pattern:

- Early failures are removed during the manufacturing process.
- The operational life is characterized by a constant failure rate.
- The wear out period is characterized by a rapidly increasing failure rate.

The failures in time (FIT) are given with a 60% confidence level for the various type codes. By convention, FIT is expressed as 1×10^{-9} failures per hour. Failure rate is also expressed as a percentage of failures per 1,000 hours, e.g., 100 FIT = 1×10^{-7} failures per hour = 0.01%/1,000 hours.

End of Life Definition

Catastrophic Failure: short circuit, open circuit or safety vent operation

Parametric Failure:

- Change in capacitance > ±10%
- Leakage current > specified limit
- ESR > 2 x initial ESR value

MEAN TIME BETWEEN FAILURES

The mean time between failures (MTBF) is simply the inverse of the failure rate.

MTBF = 1/λ

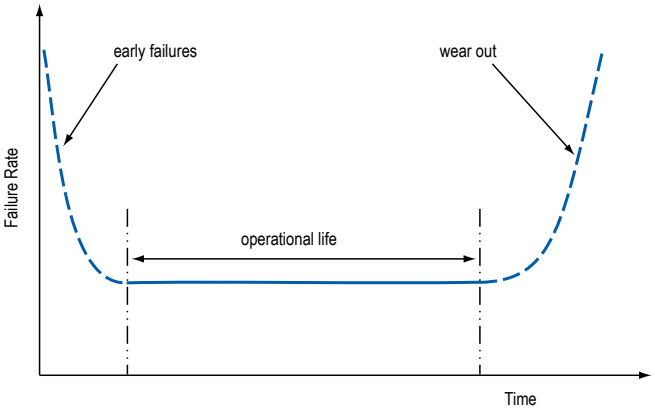

The failure rate is derived from our periodic test results. The failure rate (λ_R) is, therefore, only given at test temperature for life tests. An estimation is also given at 40°C. The expected failure rate for this capacitor range is based on our periodic test results for capacitors with structural similarity. Failure rate is frequently quoted in failure in time (FIT), where 1 FIT = 1 x 10^{-9} failures per hour. Failure rate per hour includes both catastrophic and parametric failures.

T_a	Failure Rate per Hour
85°C	250 FIT
40°C	12 FIT

Environmental Compliance

All Part Numbers in this datasheet are Reach and RoHS compliant.

As an environmentally conscious company, KEMET is working continuously with improvements concerning the environmental effects of both our capacitors and their production.

In Europe (RoHS Directive) and in some other geographical areas such as China, legislation has been put in place to prevent the use of some hazardous materials, such as lead (Pb), in electronic equipment. All products in this catalog are produced to help our customers' obligations to guarantee their products and fulfill these legislative requirements. The only material of concern in our products has been lead (Pb), which has been removed from all designs to fulfill the requirement of containing less than 0.1% of lead in any homogeneous material. KEMET will closely follow any changes in legislation worldwide and make any necessary changes in its products, whenever needed.

Some customer segments such as medical, military and automotive electronics may still require the use of lead in electrode coatings. To clarify the situation and distinguish products from each other, a special symbol is used on the packaging labels for RoHS compatible capacitors.

Due to customer requirements, there may appear additional markings such as lead-free (LF), or lead-free wires (LFW) on the label.

Table 1 – Ratings & Part Number Reference

VDC	Rated Capacitance	Size Code	Case Size	Ripple Current		ESR Maximum	Impedance Maximum	Part Number	SPQ	MOQ
	100 Hz 20°C (µF)		D x L (mm)	100 Hz 85°C (A)	10 kHz 85°C (A)	100 Hz 20°C (mΩ)	10 kHz 20°C (mΩ)			
35	33000	EF	40 x 50	7.16	10.03	42	38	ALF20(1)333EF035	36	216
35	56000	EL	40 x 80	11.68	12.92	23	21	ALF20(1)563EL035	36	216
35	100000	EP	40 x 105	14.18	15.3	17	16	ALF20(1)104EP035	36	216
40	10000	DC	35 x 35	3.69	4.01	86	71	ALF20C103DC040	100	200
40	12000	DD	35 x 40	4.14	4.5	75	62	ALF20C123DD040	100	200
40	15000	EB	40 x 30	4.42	4.51	89	79	ALF20(1)153EB040	72	216
40	18000	DF	35 x 50	5.23	5.69	55	45	ALF20C183DF040	100	200
40	18000	EC	40 x 35	4.88	4.97	78	70	ALF20(1)183EC040	72	216
40	22000	ED	40 x 40	5.81	5.92	62	56	ALF20(1)223ED040	72	216
40	27000	EF	40 x 50	7.23	7.36	43	38	ALF20(1)273EF040	36	216
40	33000	EH	40 x 60	8.74	8.91	33	30	ALF20(1)333EH040	36	216
40	47000	EL	40 x 80	10.96	11.17	23	21	ALF20(1)473EL040	36	216
40	82000	EP	40 x 105	12.63	13.44	18	17	ALF20(1)823EP040	36	216
63	6800	DC	35 x 35	3.95	4.4	75	59	ALF20C682DC063	100	200
63	8200	DD	35 x 40	4.31	4.8	69	55	ALF20C822DD063	100	200
63	8200	EB	40 x 30	3.95	4.03	82	72	ALF20(1)822EB063	72	216
63	10000	DF	35 x 50	4.85	5.4	64	51	ALF20C103DF063	100	200
63	10000	EC	40 x 35	4.58	4.67	80	72	ALF20(1)103EC063	72	216
63	12000	ED	40 x 40	5.42	5.55	64	57	ALF20(1)123ED063	72	216
63	15000	EF	40 x 50	7.02	7.18	44	39	ALF20(1)153EF063	36	216
63	18000	EH	40 x 60	8.54	8.75	35	31	ALF20(1)183EH063	36	216
63	22000	EH	40 X 60	9.84	11.34	26	22	ALF20(1)223EH063	36	216
63	27000	EL	40 x 80	10.53	10.78	24	21	ALF20(1)273EL063	36	216
63	39000	EP	40 x 105	12.23	13.51	19	17	ALF20(1)393EP063	36	216
100	2700	DC	35 x 35	3.57	4.37	92	69	ALF20C272DC100	100	200
100	2700	EB	40 x 30	3.72	3.88	121	104	ALF20(1)272EB100	72	216
100	3300	DD	35 x 40	4.11	5.03	76	57	ALF20C332DD100	100	200
100	3300	EC	40 x 35	4.09	4.24	106	92	ALF20(1)332EC100	72	216
100	3900	ED	40 x 40	4.88	5.08	85	74	ALF20(1)392ED100	72	216
100	4700	DF	35 x 50	5.23	6.4	55	41	ALF20C472DF100	100	200
100	4700	EE	40 x 45	5.6	5.83	70	61	ALF20(1)472EE100	72	216
100	5600	EF	40 x 50	6.41	6.68	59	51	ALF20(1)562EF100	36	216
100	6800	EG	40 x 55	6.61	6.84	53	46	ALF20(1)682EG100	36	216
100	8200	EH	40 x 60	7.36	7.61	44	39	ALF20(1)822EH100	36	216
100	12000	EL	40 x 80	9.14	9.45	31	27	ALF20(1)123EL100	36	216
100	18000	EP	40 x 105	11.34	12.61	19	17	ALF20(1)183EP100	36	216
200	820	DC	35 x 35	2.43	3.35	198	139	ALF20C821DC200	100	200
200	820	EB	40 x 30	3.06	3.63	178	142	ALF20(1)821EB200	72	216
200	1000	DD	35 x 40	2.81	3.87	163	114	ALF20C102DD200	100	200
200	1000	EC	40 x 35	3.43	3.99	153	124	ALF20(1)102EC200	72	216
200	1200	DF	35 x 50	3.06	4.01	135	82	ALF20C122DF200	100	200
200	1200	ED	40 x 40	4.02	4.69	124	99	ALF20(1)122ED200	72	216
200	1500	DF	35 x 50	3.7	5.1	110	77	ALF20C152DF200	100	200
200	1500	EE	40 x 45	4.61	5.38	101	81	ALF20(1)152EE200	72	216
200	1800	EF	40 x 50	5.27	6.15	84	68	ALF20(1)182EF200	36	216
200	2200	EH	40 x 60	6.29	7.43	67	53	ALF20(1)222EH200	36	216
200	3300	EL	40 x 80	7.83	9.17	46	37	ALF20(1)332EL200	36	216
200	4700	EP	40 x 105	8.08	11.73	45	32	ALF20(1)472EP200	36	216
200	5600	FP	45 x 105	8.51	12.16	42	29	ALF20(1)562FP200	30	120
200	8200	KP	50 x 105	9.17	11.76	33	25	ALF20(1)822KP200	24	96
250	680	DC	35 x 35	2.22	3.23	238	155	ALF20C681DC250	100	200
250	680	EB	40 x 30	2.79	3.56	187	144	ALF20(1)681EB250	72	216
250	820	DD	35 x 40	2.55	3.72	198	129	ALF20C821DD250	100	200
250	820	ED	40 x 40	3.8	4.91	153	116	ALF20(1)821ED250	72	216
250	1000	DF	35 x 50	3.26	4.75	163	106	ALF20C102DF250	100	200
250	1000	EE	40 x 45	4.33	5.58	126	96	ALF20(1)102EE250	72	216
250	1200	DH	35 x 60	3.76	5.48	140	100	ALF20C122DH250	50	200
250	1200	EF	40 x 50	4.94	6.37	104	80	ALF20(1)122EF250	36	216
250	1500	EG	40 x 55	5.29	6.58	89	69	ALF20(1)152EG250	36	216
250	1800	DL	35 x 80	4.6	6.69	100	82	ALF20C182DL250	50	200
VDC	**Rated Capacitance**	**Size Code**	**Case Size**	**Ripple Current**		**ESR**	**Impedance**	**Part Number**	**SPQ**	**MOQ**

(1) Termination code: See Termination Tables for available options.

Table 1 – Ratings & Part Number Reference cont.

VDC	Rated Capacitance	Size Code	Case Size	Ripple Current		ESR Maximum	Impedance Maximum	Part Number	SPQ	MOQ
	100 Hz 20°C (µF)		D x L (mm)	100 Hz 85°C (A)	10 kHz 85°C (A)	100 Hz 20°C (mΩ)	10 kHz 20°C (mΩ)			
250	1800	EH	40 x 60	5.92	7.34	74	58	ALF20(1)182EH250	36	216
250	2200	EL	40 x 80	7.33	9.49	57	43	ALF20(1)222EL250	36	216
250	3900	EP	40 x 105	7.78	11.71	46	32	ALF20(1)392EP250	36	216
250	4700	FP	45 x 105	8.22	12.11	42	29	ALF20(1)472FP250	30	120
250	5600	KP	50 x 105	8.63	12.03	38	27	ALF20(1)562KP250	24	96
350	330	EB	40 x 30	2.02	3.97	424	277	ALF20(1)331EB350	72	216
350	390	DC	35 x 35	1.82	3.07	386	259	ALF20C391DC350	100	200
350	390	EC	40 x 35	2.33	4.5	361	236	ALF20(1)391EC350	72	216
350	470	DD	35 x 40	2.07	3.47	321	216	ALF20C471DD350	100	200
350	470	ED	40 x 40	2.69	5.22	299	195	ALF20(1)471ED350	72	216
350	560	DF	35 x 50	2.8	4.8	268	180	ALF20C561DF350	100	200
350	560	EE	40 x 45	3.04	5.88	251	164	ALF20(1)561EE350	72	216
350	680	EF	40 x 50	3.46	6.65	207	136	ALF20(1)681EF350	36	216
350	820	DH	35 x 60	3.4	5.5	190	130	ALF20C821DH350	50	200
350	820	EG	40 x 55	3.84	7.16	174	114	ALF20(1)821EG350	36	216
350	820	EH	40 x 60	3.99	7.67	172	112	ALF20(1)821EH350	36	216
350	1000	DL	35 x 80	3.9	6.4	154	104	ALF20C102DL350	50	200
350	1200	EL	40 x 80	4.95	9.2	119	78	ALF20(1)122EL350	36	216
350	1800	EP	40 x 105	6.14	10.73	81	54	ALF20(1)182EP350	36	216
350	2700	FP	45 x 105	7	11.44	63	42	ALF20(1)272FP350	30	120
350	3300	KP	50 x 105	7.54	11.57	54	36	ALF20(1)332KP350	24	96
400	270	DC	35 x 35	1.61	2.88	547	376	ALF20C271DC400	100	200
400	270	EB	40 x 30	1.85	3.67	441	284	ALF20(1)271EB400	72	216
400	330	DC	35 x 35	1.73	2.92	461	320	ALF20C331DC400	100	200
400	330	DD	35 x 40	1.84	3.27	449	309	ALF20C331DD400	100	200
400	330	EC	40 x 35	2.29	4.21	378	252	ALF20(1)331EC400	72	216
400	390	DF	35 x 50	2.19	3.96	377	226	ALF20C391DF400	100	200
400	390	ED	40 x 40	2.62	4.86	312	203	ALF20(1)391ED400	72	216
400	470	DE	35 x 45	2.4	4.1	360	246	ALF20C471DE400	100	200
400	470	DF	35 x 50	2.62	4.41	321	223	ALF20C471DF400	100	200
400	470	ED	40 x 40	2.74	5.21	230	156	ALF20(1)471ED400	72	216
400	470	EE	40 x 45	3	5.49	258	168	ALF20(1)471EE400	72	216
400	560	DF	35 x 50	2.57	4.04	278	180	ALF20C561DF400	100	200
400	560	DH	35 x 60	3.01	5.11	264	184	ALF20C561DH400	50	200
400	560	EF	40 x 50	3.41	6.19	216	141	ALF20(1)561EF400	36	216
400	680	DH	35 x 60	2.9	4.73	232	142	ALF20C681DH400	50	200
400	680	EH	40 x 60	3.99	7.14	177	114	ALF20(1)681EH400	36	216
400	820	DL	35 x 80	3.7	6.09	181	127	ALF20C821DL400	50	200
400	1000	DL	35 x 80	3.98	6.32	112	77	ALF20C102DL400	50	200
400	1000	EL	40 x 80	5	8.82	120	78	ALF20(1)102EL400	36	216
400	1500	EP	40 x 105	5.79	10.16	99	68	ALF20(1)152EP400	36	216
400	2200	FP	45 x 105	6.56	10.9	77	53	ALF20(1)222FP400	30	120
400	2700	KP	50 x 105	7.11	11.13	66	45	ALF20(1)272KP400	24	96
400	3000	KP	50 X 105	8.03	12.39	61	42	ALF20(1)302KP400	24	96
450	220	DC	35 x 35	1.56	2.89	559	379	ALF20C221DC450	100	200
450	220	EB	40 x 30	1.77	3.68	517	311	ALF20(1)221EB450	72	216
450	270	DC	35 x 35	1.68	2.91	470	322	ALF20C271DC450	100	200
450	270	DD	35 x 40	1.78	3.27	458	311	ALF20C271DD450	100	200
450	270	EC	40 x 35	2.07	4.22	427	259	ALF20(1)271EC450	72	216
450	330	DD	35 x 40	2.2	3.68	364	242	ALF20C331DD450	100	200
450	330	DF	35 x 50	2.41	4.38	373	253	ALF20C331DF450	100	200
450	330	ED	40 x 40	2.47	4.91	348	210	ALF20(1)331ED450	72	216
450	390	DF	35 x 50	2.6	4.41	240	166	ALF20C391DF450	100	200
450	390	EE	40 x 45	2.7	5.53	293	177	ALF20(1)391EE450	72	216
450	470	DF	35 x 50	2.43	4.03	252	155	ALF20C471DF450	100	200
450	470	DH	35 x 60	2.95	5.12	270	185	ALF20C471DH450	50	200
450	470	EF	40 x 50	3.08	6.25	243	147	ALF20(1)471EF450	36	216
450	560	DF	35 x 50	2.7	4.74	266	172	ALF20C561DF450	100	200
450	560	EH	40 x 60	3.56	7.04	202	121	ALF20(1)561EH450	36	216
450	680	DL	35 x 80	3.61	6.09	190	131	ALF20C681DL450	50	200
VDC	**Rated Capacitance**	**Size Code**	**Case Size**	**Ripple Current**		**ESR**	**Impedance**	**Part Number**	**SPQ**	**MOQ**

(1) Termination code: See Termination Tables for available options.

Table 1 – Ratings & Part Number Reference cont.

VDC	Rated Capacitance	Size Code	Case Size	Ripple Current		ESR Maximum	Impedance Maximum	Part Number	SPQ	MOQ
	100 Hz 20°C (µF)		D x L (mm)	100 Hz 85°C (A)	10 kHz 85°C (A)	100 Hz 20°C (mΩ)	10 kHz 20°C (mΩ)			
450	820	EL	40 x 80	4.47	8.78	138	83	ALF20(1)821EL450	36	216
450	1000	EJ	40 X 70	4.42	8.42	142	93	ALF20(1)102EJ450	36	216
450	1000	EL	40 x 80	4.95	9.32	114	75	ALF20(1)102EL450	36	216
450	1200	EP	40 x 105	5.57	10.15	103	70	ALF20(1)122EP450	36	216
450	1800	FP	45 x 105	6.27	10.87	82	55	ALF20(1)182FP450	30	120
450	2200	KP	50 x 105	6.81	11.12	70	47	ALF20(1)222KP450	24	96
500	180	DC	35 x 35	1.7	2.84	728	549	ALF20C181DC500	100	200
500	180	EB	40 x 30	1.76	3.22	699	522	ALF20(1)181EB500	72	216
500	220	DD	35 x 40	1.96	3.26	622	450	ALF20C221DD500	100	200
500	220	EC	40 x 35	2.07	3.82	571	426	ALF20(1)221EC500	72	216
500	270	DF	35 x 50	2.34	3.97	505	362	ALF20C271DF500	100	200
500	270	ED	40 x 40	2.41	4.42	466	348	ALF20(1)271ED500	72	216
500	330	DF	35 x 50	2.14	3.75	492	366	ALF20C331DF500	100	200
500	330	EE	40 x 45	2.74	5	405	286	ALF20(1)331EE500	72	216
500	390	DH	35 x 60	2.87	4.67	355	258	ALF20C391DH500	50	200
500	390	EF	40 x 50	3.09	5.59	345	242	ALF20(1)391EF500	36	216
500	470	EH	40 x 60	3.56	6.43	285	201	ALF20(1)471EH500	36	216
500	560	DL	35 x 80	3.5	5.57	250	182	ALF20C561DL500	50	200
500	680	DL	35 x 80	3.65	6.45	244	178	ALF20C681DL500	50	200
500	680	EL	40 x 80	4.4	7.77	200	140	ALF20(1)681EL500	36	216
500	1000	EP	40 x 105	5.43	9.18	140	98	ALF20(1)102EP500	36	216
500	1500	FP	45 x 105	5.97	9.76	110	82	ALF20(1)152FP500	30	120
500	1800	KP	50 x 105	6.45	10.09	94	70	ALF20(1)182KP500	24	96
550	180	DC	35 X 35	1.5	2.34	1940	1694	ALF20C181DC550	100	200
550	180	EB	40 X 30	1.6	2.62	1936	1688	ALF20(1)181EB550	72	216
550	220	DD	35 X 40	1.72	2.67	1588	1388	ALF20C221DD550	100	200
550	220	EC	40 X 35	1.84	3.01	1584	1380	ALF20(1)221EC550	72	216
550	270	DF	35 X 50	2.01	3.15	1290	1126	ALF20C271DF550	100	200
550	270	ED	40 X 40	2.11	3.44	1290	1124	ALF20(1)271ED550	72	216
550	330	DH	35 X 60	2.3	3.6	1058	924	ALF20C331DH550	50	200
550	330	EE	40 X 45	2.4	3.9	1056	920	ALF20(1)331EE550	72	216
550	390	EF	40 X 50	2.67	4.33	894	780	ALF20(1)391EF550	36	216
550	470	DL	35 X 80	2.87	4.43	746	650	ALF20C471DL550	50	200
550	470	EH	40 X 60	3.05	4.93	742	648	ALF20(1)471EH550	36	216
550	680	EL	40 X 80	3.87	6.18	514	450	ALF20(1)681EL550	36	216
550	1000	EP	40 X 105	4.86	7.59	352	308	ALF20(1)102EP550	36	216
550	1200	FP	45 X 105	5.6	8.59	296	258	ALF20(1)122FP550	30	120
550	1500	KP	50 X 105	6.5	9.63	242	212	ALF20(1)152KP550	24	96
600	150	DC	35 X 35	1.56	3.11	884.2	618.2	ALF20C151DC600	100	200
600	150	EB	40 X 30	1.67	3.74	868.8	600.4	ALF20(1)151EB600	72	216
600	180	DD	35 X 40	1.77	3.54	736.4	514.8	ALF20C181DD600	100	200
600	180	EC	40 X 35	1.91	4.3	722.6	499	ALF20(1)181EC600	72	216
600	220	DF	35 X 50	2.09	4.27	598.8	417.6	ALF20C221DF600	100	200
600	220	ED	40 X 40	2.18	4.9	591.8	408.6	ALF20(1)221ED600	72	216
600	270	DH	35 X 60	2.41	4.87	489.6	341.8	ALF20C271DH600	50	200
600	270	EE	40 X 45	2.48	5.51	483.4	333.8	ALF20(1)271EE600	72	216
600	330	EF	40 X 50	2.81	6.15	396.8	274.4	ALF20(1)331EF600	36	216
600	390	DL	35 X 80	3.01	5.9	342.2	119.7	ALF20C391DL600	50	200
600	390	EH	40 X 60	3.19	6.95	336.2	232.4	ALF20(1)391EH600	36	216
600	560	EL	40 X 80	4.04	8.57	235.6	163	ALF20(1)561EL600	36	216
600	820	EP	40 X 105	5	10.1	163	113.2	ALF20(1)821EP600	36	216
600	1000	FP	45 X 105	5.74	10.99	136	94.8	ALF20(1)102FP600	30	120
600	1000	KL	50 X 80	5.69	10.33	140.4	98.4	ALF20(1)102KL600	24	96
600	1200	KP	50 X 105	6.57	11.96	117	81.8	ALF20(1)122KP600	24	96
VDC	**Rated Capacitance**	**Size Code**	**Case Size**	**Ripple Current**		**ESR**	**Impedance**	**Part Number**	**SPQ**	**MOQ**

(1) Termination code: See Termination Tables for available options.

Mechanical Data

Polarity & Reversed Voltage

Aluminium electrolytic capacitors manufactured for use in DC applications contain an anode foil and a cathode foil. As such, they are polarized devices and must be connected with the +ve to the anode foil and the -ve to the cathode foil. If this were to be reversed, then the electrolytic process that took place in forming the oxide layer on the anode would be recreated in trying to form an oxide layer on the cathode. In forming the cathode foil in this way, heat would be generated and gas given off within the capacitor, usually leading to catastrophic failure.

The cathode foil already possesses a thin stabilized oxide layer. This thin oxide layer is equivalent to a forming voltage of approximately 2 V. As a result, the capacitor can withstand a voltage reversal of up to 2 V for short periods. Above this voltage, the formation process will commence. Aluminium electrolytic capacitors can also be manufactured for the use in intermittent AC applications by using two anode foils in place of one anode and one cathode.

Mounting Position

The capacitor can be mounted upright or inclined to a horizontal position.

Insulating Resistance

≥ 100 MΩ at 100 VDC across insulating sleeve.
UL recognized sleeving is available for custom parts in this range, upon request (UL No. E358957.)

Voltage Proof

≥ 2,500 VDC across insulating sleeve.

Safety Vent

A safety vent for overpressure is featured on either the base (opposing end to the terminals) or the side of the can. This appears in the form of a grooved section on the surface of the can, which is a weakened area and designed to relieve build-up of internal pressure due to overstress or catastrophic failure.

Marking

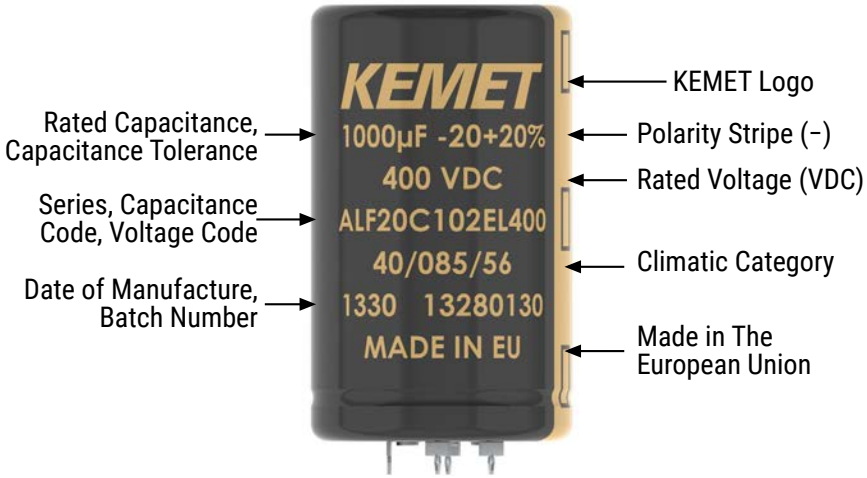

Construction

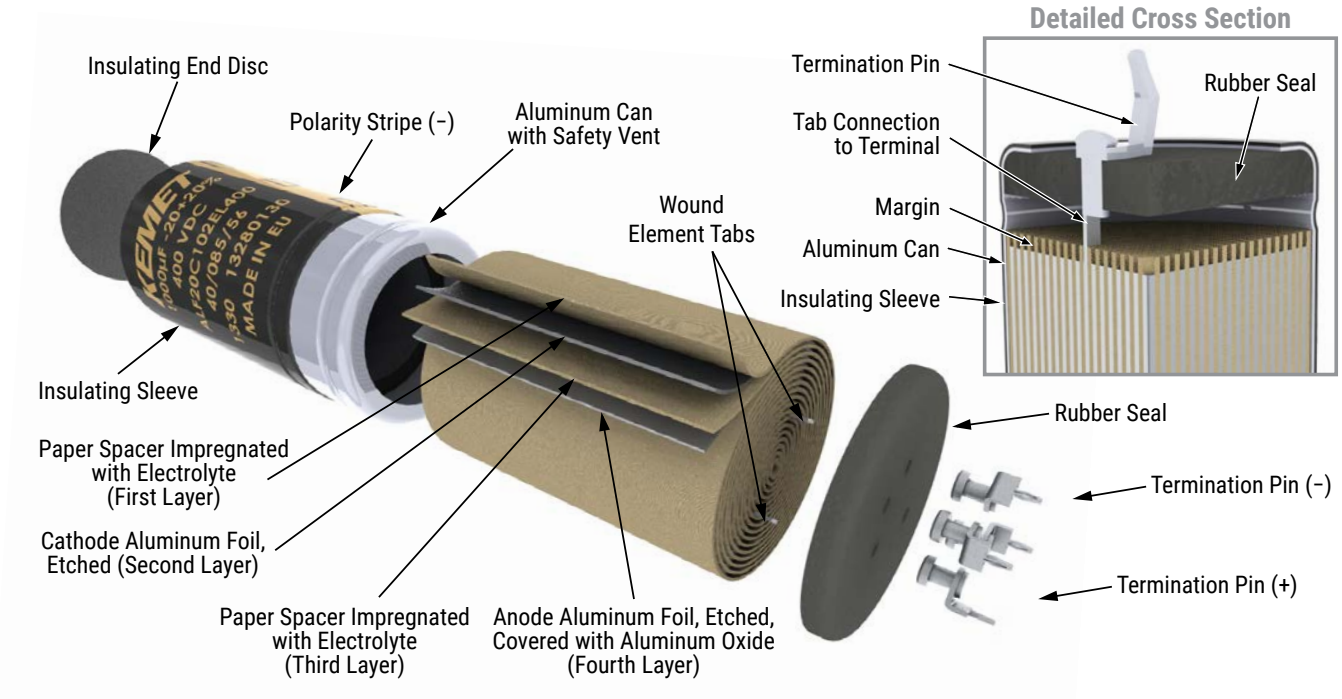

Construction Data

The manufacturing process begins with the anode foil being electrochemically etched to increase the surface area and then "formed" to produce the aluminum oxide layer. Both the anode and cathode foils are then interleaved with absorbent paper and wound into a cylinder. During the winding process, aluminum tabs are attached to each foil to provide the electrical contact.

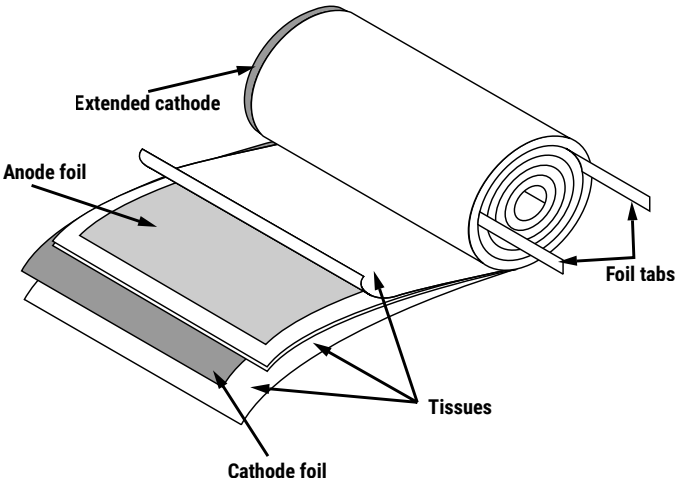

The deck, complete with terminals, is attached to the tabs and then folded down to rest on top of the winding. The complete winding is impregnated with electrolyte before being housed in a suitable container, usually an aluminum can, and sealed. Throughout the process, all materials inside the housing must be maintained at the highest purity and be compatible with the electrolyte.

Each capacitor is aged and tested before being sleeved and packed. The purpose of aging is to repair any damage in the oxide layer and thus reduce the leakage current to a very low level. Aging is normally carried out at the rated temperature of the capacitor and is accomplished by applying voltage to the device while carefully controlling the supply current. The process may take several hours to complete.

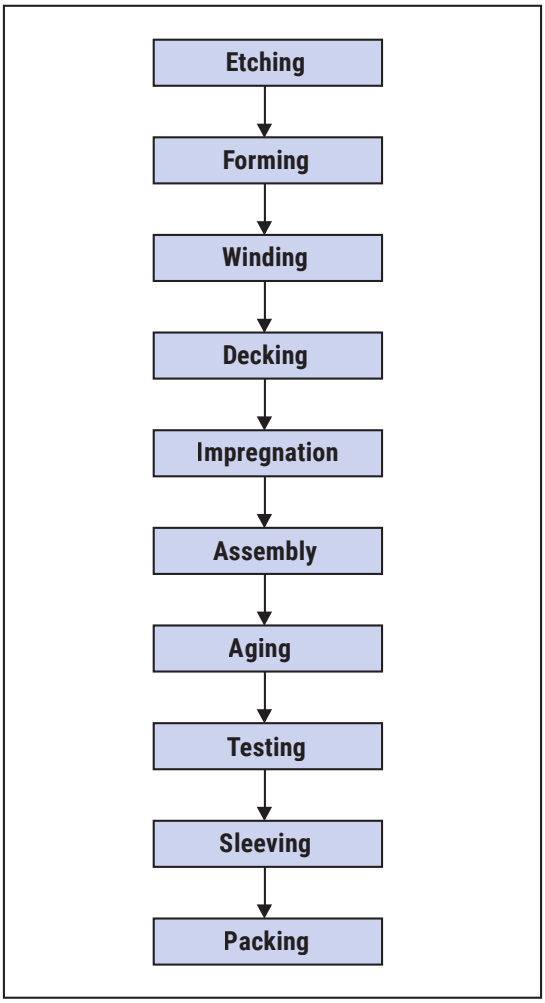

Damage to the oxide layer can occur due to variety of reasons:

- Slitting of the anode foil after forming
- Attaching the tabs to the anode foil
- Minor mechanical damage caused during winding

A sample from each batch is taken by the quality department after completion of the production process. This sample size is controlled by the use of recognized sampling tables defined in BS 6001.

The following tests are applied and may be varied at the request of the customer. In this case the batch, or special procedure, will determine the course of action.

Electrical:

- Leakage current
- Capacitance
- ESR
- Impedance
- Tan Delta

Mechanical/Visual:

- Overall dimensions
- Torque test of mounting stud
- Print detail
- Box labels
- Packaging, including packed quantity

KEMET Electronics Corporation Sales Offices

For a complete list of our global sales offices, please visit www.kemet.com/sales.

Disclaimer

All product specifications, statements, information and data (collectively, the "Information") in this datasheet are subject to change. The customer is responsible for checking and verifying the extent to which the Information contained in this publication is applicable to an order at the time the order is placed. All Information given herein is believed to be accurate and reliable, but it is presented without guarantee, warranty, or responsibility of any kind, expressed or implied.

Statements of suitability for certain applications are based on KEMET Electronics Corporation's ("KEMET") knowledge of typical operating conditions for such applications, but are not intended to constitute – and KEMET specifically disclaims – any warranty concerning suitability for a specific customer application or use. The Information is intended for use only by customers who have the requisite experience and capability to determine the correct products for their application. Any technical advice inferred from this Information or otherwise provided by KEMET with reference to the use of KEMET's products is given gratis, and KEMET assumes no obligation or liability for the advice given or results obtained.

Although KEMET designs and manufactures its products to the most stringent quality and safety standards, given the current state of the art, isolated component failures may still occur. Accordingly, customer applications which require a high degree of reliability or safety should employ suitable designs or other safeguards (such as installation of protective circuitry or redundancies) in order to ensure that the failure of an electrical component does not result in a risk of personal injury or property damage.

Although all product–related warnings, cautions and notes must be observed, the customer should not assume that all safety measures are indicted or that other measures may not be required.

KEMET is a registered trademark of KEMET Electronics Corporation.