THIS DRAWING IS UNPUBLISHED. RELEASED FOR PUBLICATION -,- .
© COPYRIGHT - By - ALL RIGHTS RESERVED.

LOC	DIST
BD	0

REVISIONS

P	LTR	DESCRIPTION	DATE	DWN	APVD
	G3	REVISED PER ECO-11-004587	11MAR11	RK	HMR

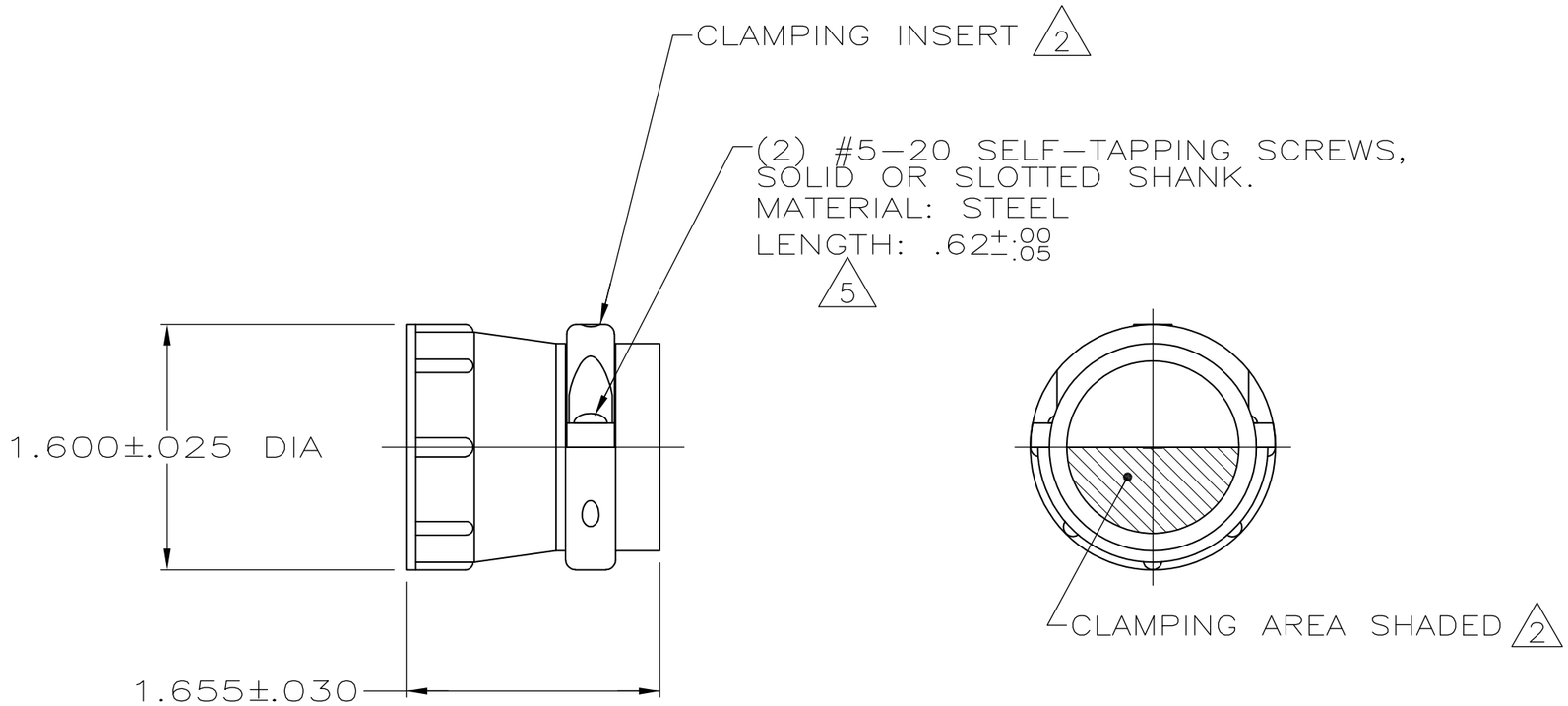

1 PARTS PACKAGED UNASSEMBLED.

2 CABLE CLAMPING AREA ADJUSTABLE FROM .261 TO .517 SQ IN BY CHANGING CLAMPING INSERT.

3 1.125 MAXIMUM CABLE OUTSIDE DIAMETER.

4 BULK PACKAGED KITS TO BE ORDERED IN MULTIPLES OF 75 ONLY.

5 FINISH: ZINC NON-HEXAVALENT CHROMATE.

6 OBSOLETE PARTS: OBSOLETE CIS STREAMLINING PER D.RENAUD/D.SINISI

	SCREW FINISH	PACKAGING	PART NUMBER
	5	4 BULK	206512-6
	5	INDIVIDUAL	206512-5
OBSOLETE	5	SMALL PACK	206512-4
6 OBSOLETE	~~5~~	~~SMALL PACK~~	~~206512-3~~
SUPERSEDED BY 206512-6	5	4 BULK	206512-2
SUPERSEDED BY 206512-5	5	INDIVIDUAL	206512-1

THIS DRAWING IS A CONTROLLED DOCUMENT.

DIMENSIONS: INCHES

TOLERANCES UNLESS OTHERWISE SPECIFIED:
0 PLC ± -
1 PLC ± -
2 PLC ± -
3 PLC ± -
4 PLC ± -
ANGLES ± -

MATERIAL: THERMOPLASTIC

FINISH: -

DWN A GRAFF 4/29/91
CHK W.G.LENKER 7-23-92
APVD -
PRODUCT SPEC 108-10024
APPLICATION SPEC -
WEIGHT -

TE Connectivity

NAME: CABLE CLAMP KIT, LARGE, SHELL SIZE 23, CPC

SIZE	CAGE CODE	DRAWING NO	RESTRICTED TO
A3	00779	C-206512	-

CUSTOMER DRAWING | SCALE 1:1 | SHEET 1 OF 1 | REV G3