THIS DRAWING IS UNPUBLISHED. RELEASED FOR PUBLICATION 20
© COPYRIGHT 20 BY TYCO ELECTRONICS CORPORATION, ALL RIGHTS RESERVED.

LOC	DIST
ES	00

REVISIONS

P	LTR	DESCRIPTION	DATE	DWN	APVD
	A4	ECR-10-014679	19JUL2010	OW	JZ

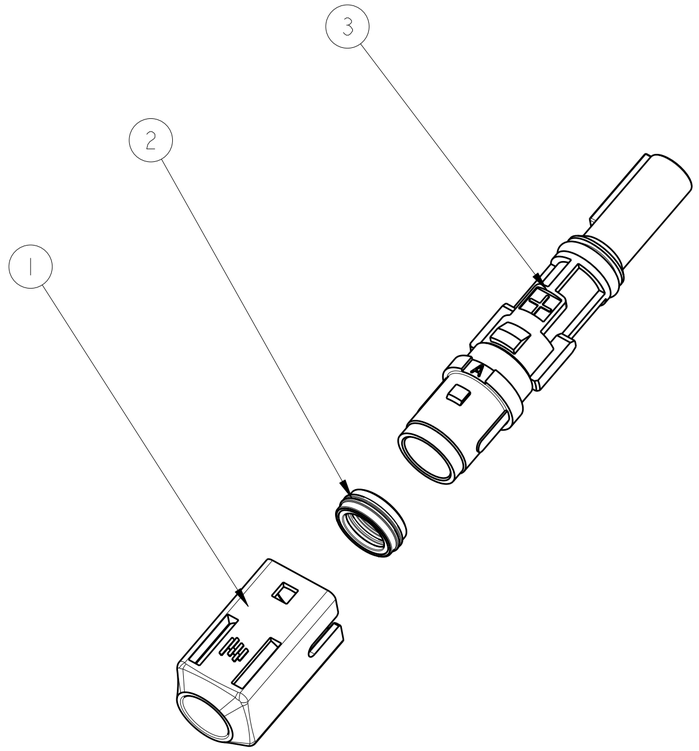

-1,-3 AS SHOWN

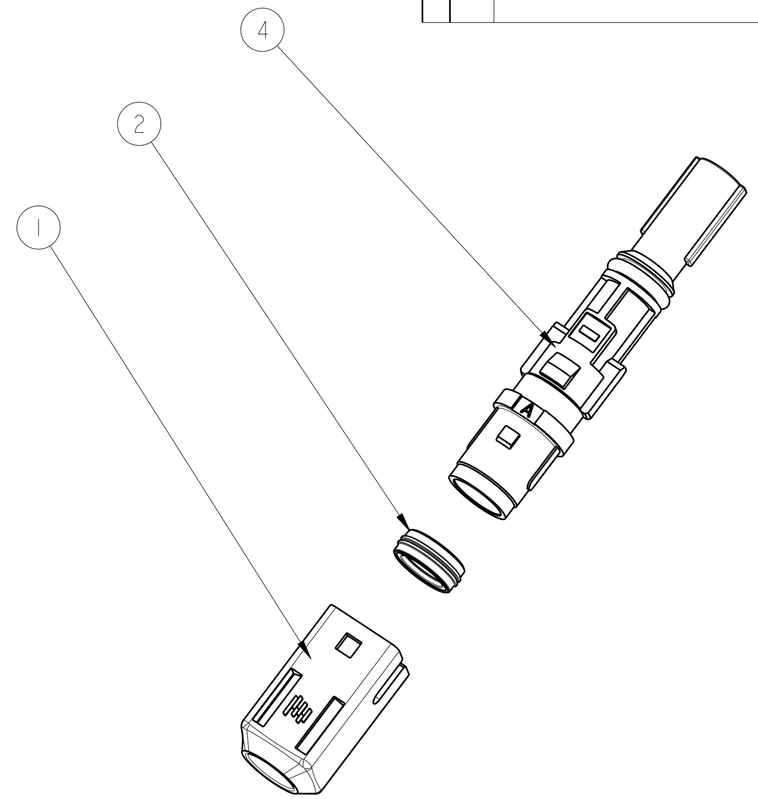

-2,-4 AS SHOWN

NOTE
1.ALL THE COMPENTS ARE PACKAGED SEPARATELY

-4	-3	-2	-1	PARTS NO.	DESCRIPTION	ITEM NO.
1	-	1	-	1971227-2	MINUS SOCKET HSG WITH O-RING	4
-	1	-	1	1971227-1	PLUS SOCKET HSG WITH O-RING	3
1	1	-	-	1971128-2	SEALER SOCKET PINCH END	2
-	-	1	1	1971128-1		
1	1	1	1	1971127-1	PINCH HSG	1

QTY PER ASSY — PARTS LIST

THIS DRAWING IS A CONTROLLED DOCUMENT FOR TYCO ELECTRONICS CORPORATION. IT IS SUBJECT TO CHANGE AND THE CONTROLLING ENGINEERING ORGANIZATION SHOULD BE CONTACTED FOR THE LATEST REVISION.

DIMENSIONS: mm

TOLERANCES UNLESS OTHERWISE SPECIFIED
0 PLC ±-
1 PLC ±-
2 PLC ±-
3 PLC ±-
4 PLC ±-
ANGLES ±-

MATERIAL -
FINISH -

DWN 20JUL2010 OLIVER WANG
CHK 20JUL2010 DAVID HU
APVD 20JUL2010 JUI IAN ZHOU
PRODUCT SPEC 108-106018
APPLICATION SPEC 114-106001
WEIGHT -

Tyco Electronics
Tyco Electronics
SHANGHAI, CHINA

NAME SOCKET ASSY

SIZE	CAGE CODE	DRAWING NO	RESTRICTED TO
A2	00779	C-1971131	

CUSTOMER DRAWING | SCALE 2:1 | SHEET 1 OF 1 | REV A4

AMP 1471-9 REV 31MAR2000

Pro/ENGINEER DRAWING