| Part Number | Length (Meters) |
|---|---|
| CA0161A22301012 | 1 (3.28 FEET) |
| CA0161A22302012 | 2 (6.56 FEET) |
| CA0161A22303012 | 3 (9.84 FEET) |
| CA0161A22305012 | 5 (16.40 FEET) |
| CA0161A22307012 | 7 (22.96 FEET) |
| CA0161A22310012 | 10 (32.80 FEET) |
| CA0161A22313012 | 13 (42.65 FEET) |
| CA0161A22315012 | 15 (49.21 FEET) |

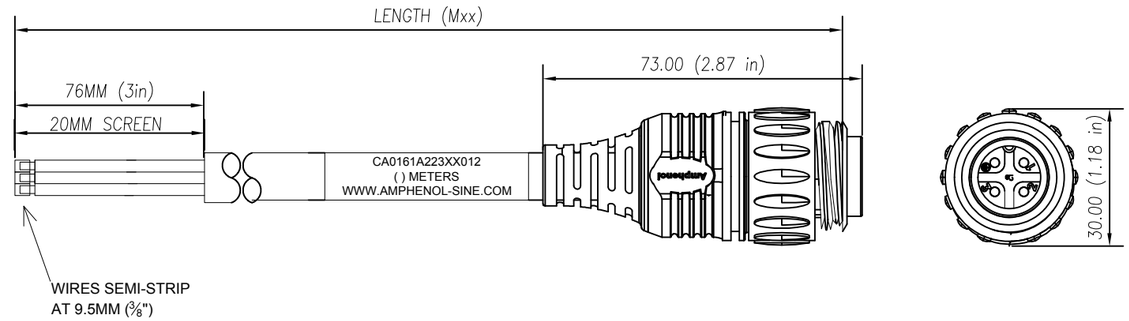


WIRING DIAGRAM

TECHNICAL DATA:

1) MATERIALS:
   - COUPLING NUT: NYLON PA 6.6
   - INSULATION INSERT: NYLON PA 6.6, UL 94/V-0
   - CONTACT: SILVER PLATED
   - OVERMOLD MATERIAL: THERMOPLASTIC COLOR: BLACK
   - CABLE RATING: UL LISTED: TC-ER PER UL 1277, MTW PER UL 1063, WTTC PER UL 2277, SUMERSIBLE
   - PUMP ATTRIBUTES LISTED: UL OIL RES I/II, 75°C WET; 90°C DRY, SUNLIGHT RESISTANT, DIRECT BURIAL, NFPA 79 2015
   - CABLE JACKET MATERIAL: PVC COLOR: BLACK
   - CONDUCTOR INSULATION: PVC
   - NUMBER OF CONDUCTORS: (4) 14AWG

2) ELECTRICAL DATA:
   - CURRENT (MAX): 16A
   - VOLTAGE (MAX): 400V AC/DC
   - INSULATION RESISTANCE (MIN): 5000M OHMS
   - DIELECTRIC TEST VOLTAGE: 2200V

3) MECHANICAL DATA:
   - TEMPERATURE RANGE: -40°C TO +100°C
   - PROTECTION: IP68 (MATED CONDITION)
   - MATING CYCLES: >500

4) RoHS COMPLIANT

| TOLERANCE | |
|---|---|
| 0-2.99 M = +100.0/-25.0mm | 0-9.99 FT = +4" / -1" |
| 3-8.99 M = +150.0/-25.0mm | 10.00-29.99 FT = +6" / -1" |
| 9-14.99 M = +300.0/-25.0mm | 30.00-49.99 FT = +12" / -1" |
| 15-OVER M = +450.0/-25.0mm | 50 FT-OVER = +18" / -1" |

Risk of Electrical Shock
Do Not Disconnect Under Load.
Risque de chocs electriques
Ne pas debrancher sous tension.
⚠WARNING

| REVISIONS | | | | | | | |
|---|---|---|---|---|---|---|---|
| REV | ZONE | ECO | DESCRIPTION | DATE | BY | CHK | APPR |
| A1 | - | - | TECHNICAL DATA SHEET RELEASE | 14-JULY-2017 | RO | - | – |

| QUANTITY | PART NUMBER | DESCRIPTION | ITEM |
|---|---|---|---|
| MATERIALS LIST | | | |

UNLESS OTHERWISE SPECIFIED
1) All dimensions are in metric(mm).
2) Tolerances are as follows:
1 PL DEC ±0.30
2 PL DEC ±0.15
3 PL DEC ±0.08
Fractions ±1/64
Angles ±1°
3) Note reference = ⚠

| SIGNATURES | | DATE |
|---|---|---|
| DRAWN: | KMM | 12-MAY-14 |
| CHECKED: | MRF | 12-MAY-14 |
| ENGINEER: | KMM | |
| APPROVAL: | RFC | 12-MAY-14 |

MATERIAL SPECIFICATIONS:

CUSTOMER:

PROCESS SPECIFICATIONS:

NEXT ASSY:

THIS DRAWING IS SUPPLIED FOR INFORMATION ONLY. DESIGN FEATURES, SPECIFICATIONS AND PERFORMANCE DATA SHOWN HEREON ARE THE PROPERTY OF THE AMPHENOL CORPORATION. NO RIGHTS OF REPRODUCTION ARE IMPLIED. ALL DIMENSIONS ARE SUBJECT TO NORMAL MANUFACTURING VARIATIONS.

Amphenol

Sine Systems - www.sineco.com
44724 Morley Drive
Clinton Township, MI 48036

Ecomate 4 Pos Circular Molded, Std. Strain relief, Male to Leads, 14AWG

| SIZE | TYPE | DWG NO | REVISION |
|---|---|---|---|
| | C- | CA0161A223XX012 | A1 |

SCALE: HALF | CA0161A223XX012 | SHEET 1 OF 1

TITLE: M8L 3-Pin -SIS-PVC, M Meters
DWG NO: M8L3MVMXXX
REV: C1
SH: 1
OF: 1