38630

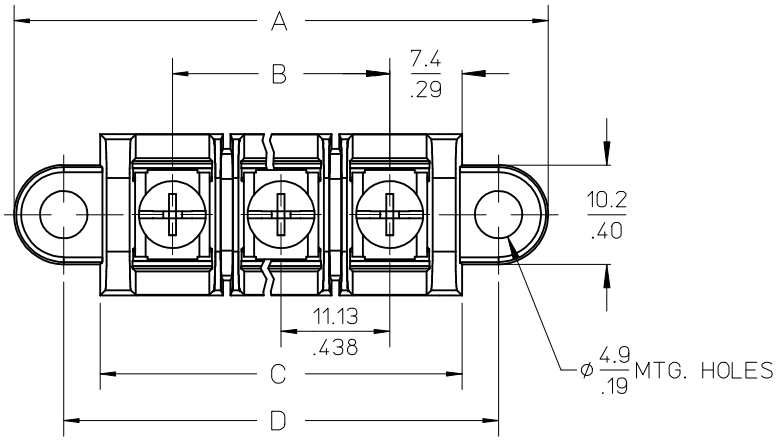

MATERIAL NUMBER (STD.)	MATERIAL NUMBER (-50)	NO. OF CIRCUITS	A	B	C	D
386300402	386301602	2	43.4 (1.71)	11.13 (.438)	25.9 (1.02)	33.3 (1.31)
386300403	386301603	3	54.6 (2.15)	22.22 (.875)	37.1 (1.46)	44.5 (1.75)
386300404	386301604	4	65.7 (2.59)	33.35 (1.313)	48.3 (1.90)	55.6 (2.19)
386300405	386301605	5	76.7 (3.02)	44.45 (1.750)	59.2 (2.33)	66.5 (2.62)
386300406	386301606	6	87.9 (3.46)	55.57 (2.188)	70.4 (2.77)	77.7 (3.06)
386300407	386301607	7	99.1 (3.90)	66.67 (2.625)	81.5 (3.21)	88.9 (3.50)
386300408	386301608	8	110.2 (4.34)	77.80 (3.063)	92.7 (3.65)	100.0 (3.94)
386300409	386301609	9	121.2 (4.77)	88.90 (3.500)	103.6 (4.08)	111.0 (4.37)
386300410	386301610	10	132.3 (5.21)	100.03 (3.938)	114.8 (4.52)	122.2 (4.81)
386300411	386301611	11	143.5 (5.65)	111.13 (4.375)	125.9 (4.96)	133.4 (5.25)
386300412	386301612	12	154.7 (6.09)	122.25 (4.813)	137.2 (5.40)	144.5 (5.69)
386300413	386301613	13	165.6 (6.52)	133.35 (5.250)	148.1 (5.83)	155.4 (6.12)
386300414	386301614	14	176.8 (6.96)	144.45 (5.687)	159.3 (6.27)	166.6 (6.56)
386300415	386301615	15	188.0 (7.40)	155.58 (6.125)	170.4 (6.71)	177.8 (7.00)
386300416	386301616	16	199.1 (7.84)	166.70 (6.563)	181.6 (7.15)	189.0 (7.44)

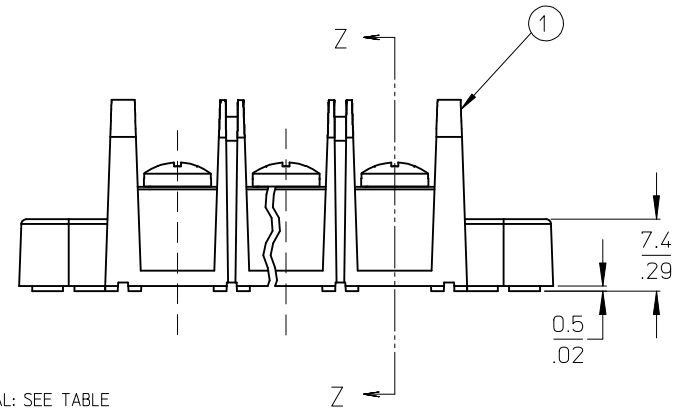

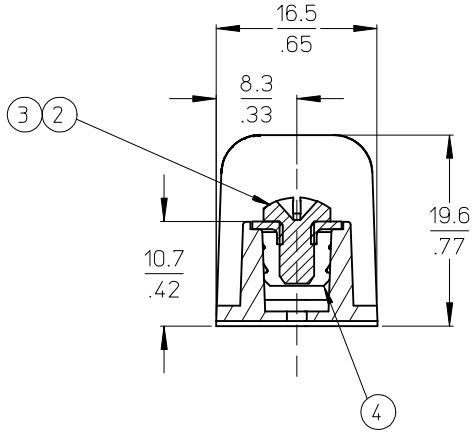

SECTION Z-Z

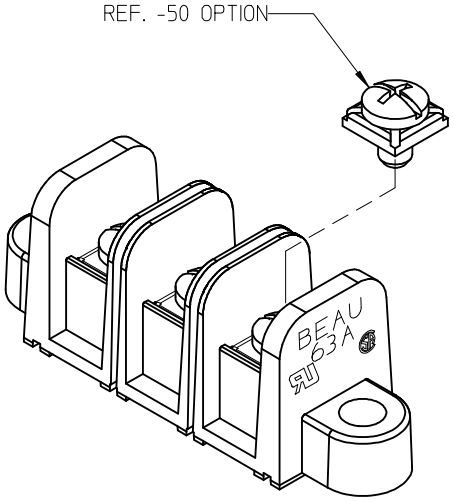

NOTES:

1. MATERIAL: SEE TABLE
2. FINISHES: SEE TABLE
3. PRODUCT SPECIFICATION: NOT REQUIRED
4. PACKAGING: NOT REQUIRED
5. MATES WITH: NONE
6. "XX" REFERS TO QTY. OF CIRCUITS
7. ROHS COMPLIANT (B)

ITEM	QTY.	DESCRIPTION	MATERIAL	FINISH
4	XX	TERMINAL, CLOSED BACK	BRASS	TIN PLATE
3	XX	SCREW/WSHR #6-32X.250 PAN, PH-SL (-50)	STEEL (B)	ZN, CLEAR CHROMATE
2	XX	SCREW #6-32X.250 BHD, PH-SL (STD.)	STEEL (B)	ZN, CLEAR CHROMATE
1	1	BARRIER TERMINAL STRIP (B)	POLYESTER (PBT)	BLACK

UPDATE MAT. DESCRIP.
EC NO: WNA2009-0085
DRWN: JENCINAS 2008/11/25
CH'KD: CYORK 2008/12/15
APPR: JMACNEIL 2008/12/15
DESCRIPTION
REV B

QUALITY SYMBOLS
▼=0
(C)=0

GENERAL TOLERANCES (UNLESS SPECIFIED)

	mm	INCH
4 PLACES	± ---	± ---
3 PLACES	± ---	± .005
2 PLACES	± 0.13	± .01
1 PLACE	± 0.3	± ---
ANGULAR ± 2 °		

DRAFT WHERE APPLICABLE MUST REMAIN WITHIN DIMENSIONS

DIMENSION STYLE: MM/IN
SCALE: 2:1
DESIGN UNITS: INCH
THIRD ANGLE PROJECTION

DRAWN BY: R. STONE DATE: 2002/10/24
CHECKED BY: R. KEMP DATE: 2002/10/25
APPROVED BY: P. WALTZ DATE: 2002/10/28

TITLE: 11.13/.438" PCB BTS 600V MTG ENDS, CLOSED BACKS (63A1XX)

molex MOLEX INCORPORATED

MATERIAL NO.: SEE CHART
DOCUMENT NO.: SD-38630-001
SHEET NO.: 1 OF 1
SIZE: B

THIS DRAWING CONTAINS INFORMATION THAT IS PROPRIETARY TO MOLEX INCORPORATED AND SHOULD NOT BE USED WITHOUT WRITTEN PERMISSION