IP54

80×80×25 mm

San Ace 80WS 9WS type

General Specifications

- Material ····· Frame: Plastic (Flammability: UL 94V-0), Impeller: Plastic (Flammability: UL 94V-1)
- Expected life ····· See the table below. (L10 life: 90% survival rate for continuous operation in indoor free air at 60˚C, rated voltage)
- Motor protection function ····· Locked rotor burnout protection, Reverse polarity protection
  For details, please refer to p. 547.
- Dielectric strength ····· 50/60 Hz, 500 VAC, for 1 minute (between lead wire conductors and frame)
- Insulation resistance ····· 10 MΩ or more with a 500 VDC megger (between lead wire conductors and frame)
- Sound pressure level (SPL) ····· At 1 m away from the air inlet
- Storage temperature ····· -30 to +70˚C (Non-condensing)
- Lead wire ····· ⊕Red ⊖Black or Blue (Sensor) Yellow
- Mass ····· 120 g
- Ingress protection ····· IP54

Specifications

The models listed below **have ribs and pulse sensors.** For models without ribs, append "1" to the end of model numbers.

Model no.	Rated voltage [V]	Operating voltage range [V]	Rated current [A]	Rated input [W]	Rated speed [min⁻¹]	Max. airflow [m³/min]	Max. airflow [CFM]	Max. static pressure [Pa]	Max. static pressure [inchH₂O]	SPL [dB (A)]	Operating temperature [˚C]	Expected life [h]
9WS0812H401	12	10.2 to 13.8	0.16	1.92	3100	0.94	33.2	45.1	0.181	32	-20 to +70	40000/60˚C
9WS0812F401			0.13	1.56	2700	0.83	29.3	34.3	0.138	28		
9WS0812M401			0.1	1.2	2200	0.65	23.0	23.5	0.094	23		
9WS0824H401	24	20.4 to 27.6	0.09	2.16	3100	0.94	33.2	45.1	0.181	32		
9WS0824F401			0.07	1.68	2700	0.83	29.3	34.3	0.138	28		
9WS0824M401			0.05	1.2	2200	0.65	23.0	23.5	0.094	23		

The following sensor and control options are available for selection.
Available for all models. Without sensor
Differs according to the model. Refer to the table on p. 581. Lock sensor

Airflow - Static Pressure Characteristics

9WS0812H401 With pulse sensor

Operating voltage range

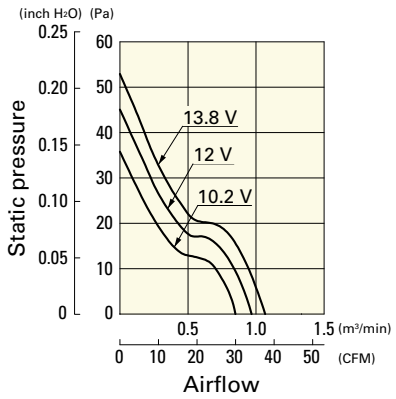

9WS0812F401 With pulse sensor

Operating voltage range

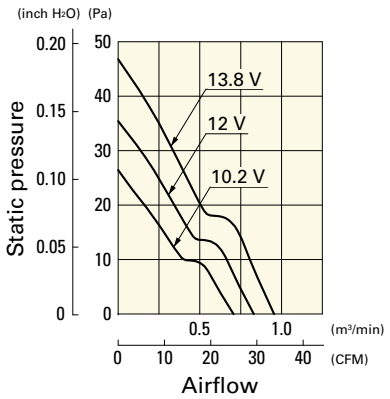

9WS0812M401 With pulse sensor

Operating voltage range

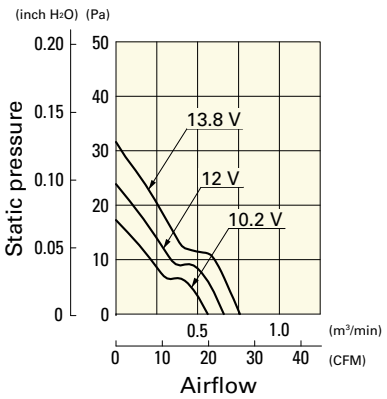

Airflow - Static Pressure Characteristics

9WS0824H401 With pulse sensor

Operating voltage range

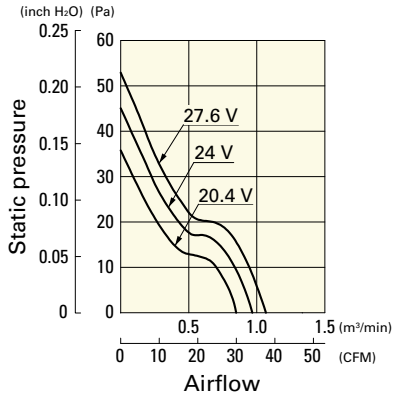

9WS0824F401 With pulse sensor

Operating voltage range

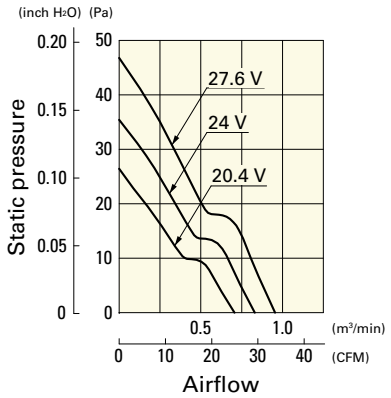

9WS0824M401 With pulse sensor

Operating voltage range

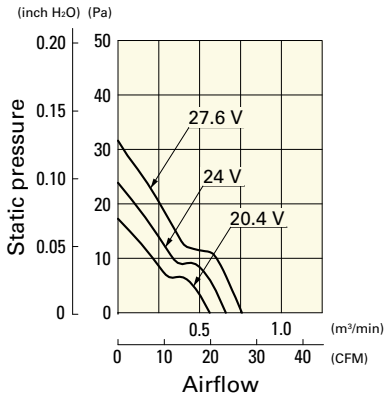

Dimensions (unit: mm) (With ribs)

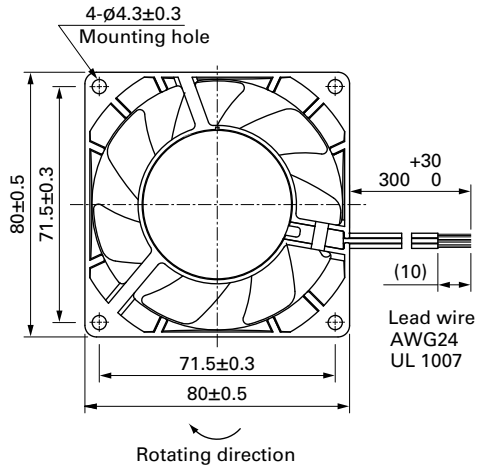

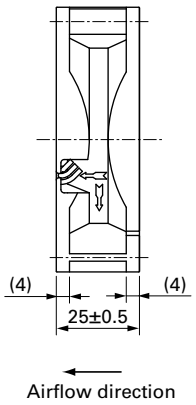

Reference Dimensions of Mounting Holes and Vent Opening (unit: mm)

Inlet side, Outlet side

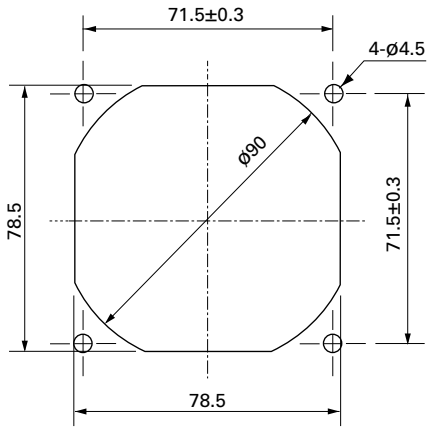

Options

Finger guards page: p. 532

Model no.: 109-049E, 109-049H, 109-049C

Resin finger guards page: p. 539

Model no.: 109-1002G