THIS DRAWING IS UNPUBLISHED RELEASED FOR PUBLICATION 2015
© COPYRIGHT 2013 BY TE CONNECTIVITY ALL RIGHTS RESERVED.

LOC	DIST

REVISIONS

P	LTR	DESCRIPTION	DATE	DWN	APVD
	NC	NEWRELEASE PER E.O. P21126	8NOV2011	IG	RDR
	A	REVISED PER ECO-14-002953	29JAN2014	PV	DM
	A1	REVISED PER ECO-15-002653	16APR2015	JA	DM

SEAL TYPE	CONTACT SIZE	MIN INSUL O.D. [mm]	MAX INSUL O.D. [mm]	WIRE RANGE [mm²] REF ONLY
N	16	.100 [2.54]	.150 [3.81]	14-20 AWG [2.0-.50]
E	16	.053 [1.35]	.120 [3.05]	14-20 AWG [2.0-.50]

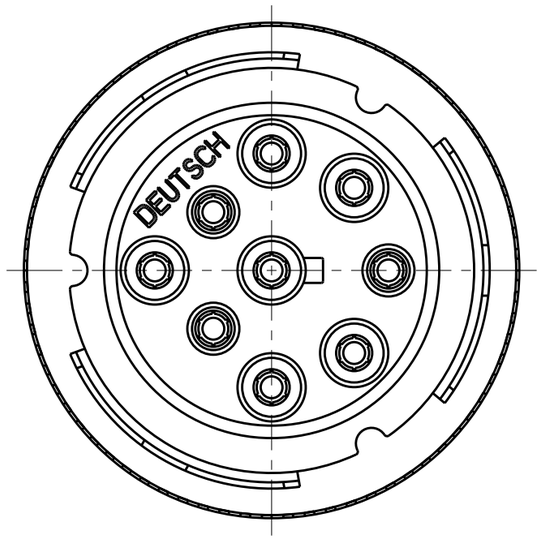

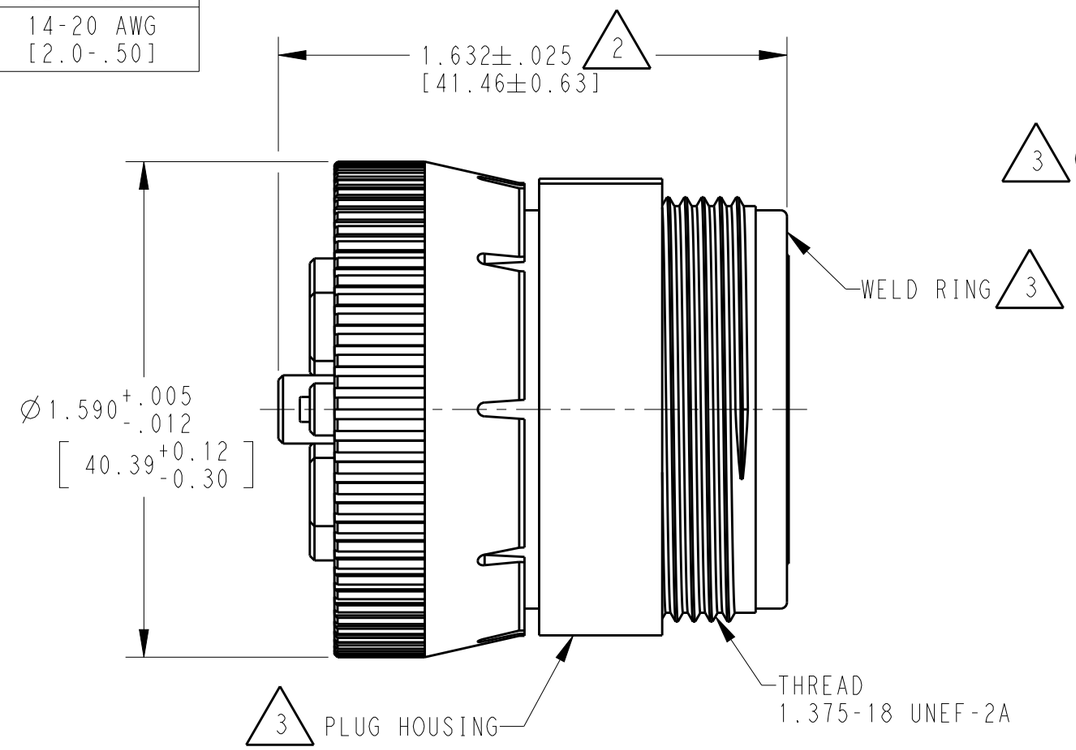

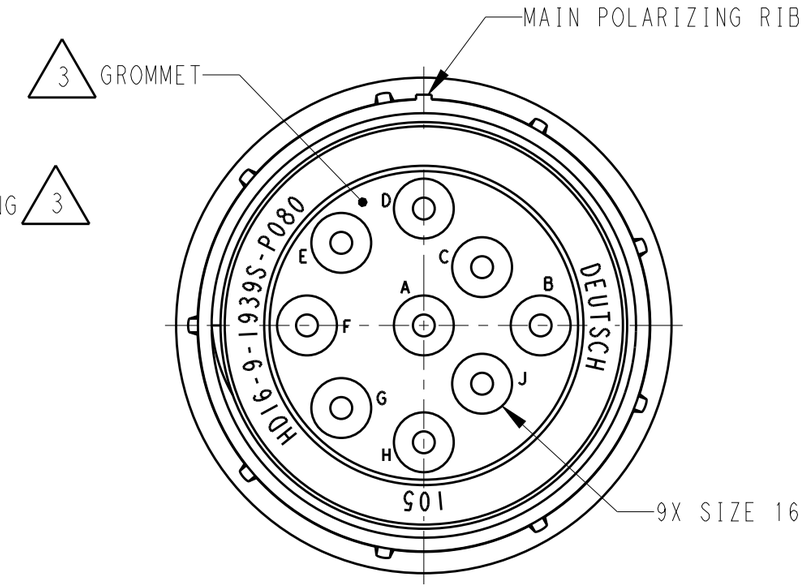

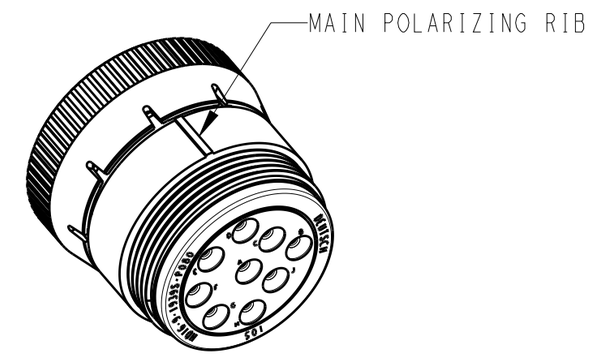

SCALE 1:1

TE INTERNAL PN	DEUTSCH PN
HD16-9-1939S-P080	HD16-9-1939S-P080
HD16-9-1939SE-P080	HD16-9-1939SE-P080

4. P080 MODIFICATION: SAE J1939-13, TYPE 2.

3 MATERIAL: PLUG HOUSING: PA66 GF15 (GREEN)
WELD RING: PA66 GF15 (GREEN)
GROMMET: SILICONE (ORANGE-RED)

2 OVERALL DIMENSION DOES NOT INCLUDE RUBBER GROMMET.

1. THIS PLUG MATES WITH FOLLOWING RECEPTACLES:
HD10-9-1939PX-P080
HD10-9-1939PX-BP03
HD14-9-91939PX-P080
HD10-9-1939PX
HD10-9-1939PX-B022
HD14-9-1939PX
X = SEAL TYPE (N,E)

NOTES:

THIS DRAWING IS A CONTROLLED DOCUMENT.

DIMENSIONS: INCHES[mm]

TOLERANCES UNLESS OTHERWISE SPECIFIED:
0 PLC ±
1 PLC ±
2 PLC ±
3 PLC ±.015 [0.38]
4 PLC ±
ANGLES ±0°30'0"

MATERIAL 3

FINISH N/A

DWN 10AUG2011 I.GRANTCHAROVA
CHK 18SEP2013 I.GRANTCHAROVA
APVD 19SEP2013 D.MEYER

PRODUCT SPEC 0425-015-0000
APPLICATION SPEC 0425-015-0000
WEIGHT 35.0g

Customer Drawing

TE Connectivity

NAME PLUG CONNECTOR
9-1939 ARRANGEMENT, -P080 MOD
HD10 SERIES

SIZE	CAGE CODE	DRAWING NO	RESTRICTED TO
A3	4AFU8	C-HD16-9-1939SX-P080	-

SCALE 2:1 SHEET 1 OF 1 REV A1

1470-19 (3/11)