Rectangular Style Analog Panel Meters

MADE IN THE USA SINCE 1936 RELIABILITY BEYOND MEASURE

- **UL Recognized - File # E91015 Except for the Wattmeters & Frequency Meters**
- **Plastic case with Glass Window**
- **Calibration not affected when mounted on steel**
- **Three popular sizes: 2-1/2”, 3-1/2”, 4-1/2”**

For Specifications and Dimensions see the last pages

Ordering Information

Frequency, Self-Shielding Movement Not				
		Model / Size and Catalog Number		
Range	Voltage	2-1/2” Model 187	3-1/2” Model 87	4-1/2” Model 89
45-55 Hz	120V	35136	35142	35148
55-65 Hz	120V	35138	35144	35150
380-420 Hz	120V	35140	35146	35152
45-55 Hz	240V	35137	35143	35149
55-65 Hz	240V	35139	35145	35151
380-420 Hz	240V	35141	35147	35153

Ordering Information

4-20 mA Process Meters, Dial Indicates 0-100%				
Size	Style	Model	Approx. Impedance (Ohms)	Catalog No.
3-1/2”	Rectangular	27	5.0	35023
4-1/2”	Rectangular	29	5.0	35024

Wattmeters, Self Shielding Movement					Not
Range	Maximum		Model / Size and Catalog Number		
	Volts	Amps	2-1/2” Model 177	3-1/2” Model 77	4-1/2” Model 79
0-20	150	.400	< >	< >	10714
0-75	150	1.0	10860	10650	10720
0-150	150	2.0	< >	< >	10730
0-300	150	4.0	< >	< >	10740
0-600	300	4.0	< >	10680	10750
0-750	150	10.0	10900	10690	10760
0-1500	300	10.0	10910	10700	10770
0-3000	300	20.0	10920	10710	10780
< > Available on special order					

Ordering Information

DC Voltmeters, Self-Shielding Movement				
Range	Approx. Impedance (Ohms) @ 60 Hz	Model / Size and Catalog Number		
		2-1/2" Model 127	3-1/2" Model 27	4-1/2" Model 29
0-1.5	1000 Ohms per Volt	09020	07290	07620
0-3		09030	07300	07630
0-5		09040	07310	07640
0-8		09050	< >	07650
0-10		09060	07330	07660
0-15		09080	07350	07670
0-25		09090	07360	07680
0-30		09100	07370	07690
0-50		09110	07380	07700
0-100		09130	07400	07710
0-150		09140	07410	07720
0-200		09160	07430	07730
0-250		09170	07440	07740
0-300		09180	07450	07750
0-500	2000 Ohms per Volt	09200	07470	07760
0-750		< >	07490	07770
0-1000		< >	07495 *	07780 *
0-1500		< >	07520 *	07790 *
0-2000		09225 *	07530 *	07800 *
0-2500		< >	07550 *	07810 *
0-3000		< >	07560 *	07820 *
0-4000		< >	< >	07830 *
0-5000		< >	07600 *	07840 *
< > Available on special order				
* External multipliers (Model 183) are furnished on 2-1/2" DC meters 750 volts or higher and on 3-1/2" and 4-1/2" DC Meters 1000 volts or higher				

Ordering Information

DC Millivoltmeters, Self-Shielding Movement				
Range	Approx. Impedance (Ohms) @ 60 Hz	Model / Size and Catalog Number		
		2-1/2" Model 127	3-1/2" Model 27	4-1/2" Model 29
0-50	10.0	06990	06930	06950
0-100	20.0	< >	06940	06960
< > Available on special order				

DC Taut-Band Microammeters, Self-Shielding Movement				
Range	Approx. Impedance (Ohms) @ 60 Hz	Model / Size and Catalog Number		
		2-1/2" Model 127T	3-1/2" Model 27T	4-1/2" Model 29T
0-10	4900	04246	03839	03939
0-15	1960	04248	03841	03941
0-25	1960	04251	03851	03951
0-50	960	04261	03961	03961
0-100	500	< >	03871	03971
< > Available on special order				

Ordering Information

DC Microammeters, Self-Shielding Movement				
Range	Approx. Impedance (Ohms) @ 60 Hz	Model / Size and Catalog Number		
		2-1/2" Model 127	3-1/2" Model 27	4-1/2" Model 29
0-50	1800	04260	03860	03960
0-100	1800	04270	03870	03970
0-200	1100	04280	03880	03980
0-500	90	< >	03890	03990
25-0-25	1800	04243	03900	04000
50-0-50	1800	04245	03910	04010
100-0-100	1100	04247	03920	04020
500-0-500	43	< >	03930	04030
< > Available on special order				

DC Milliammeters, Self-Shielding Movement				
Range	Approx. Impedance (Ohms) @ 60 Hz	Model / Size and Catalog Number		
		2-1/2" Model 127	3-1/2" Model 27	4-1/2" Model 29
0-1	43.0	05760	04790	05070
0-1.5	43.0	< >	04810	05080
0-3	2.0	05790	04820	05090
0-5	2.0	05800	04830	05100
0-10	10.0	05810	04840	05110
0-15	6.6	05830	04860	05120
0-20	5.0	< >	04880	05130
0-25	4.0	05860	04890	05140
0-50	2.0	05880	04910	05150
0-75	1.3	< >	< >	< >
0-100	1.0	05910	04940	05170
0-150	.66	05930	04960	05180
0-200	.5	05940	04980	05190
0-250	.4	< >	05000	05200
0-300	.33	< >	05010	05210
0-500	.2	05990	05030	05220
0-750	.13	< >	05050	05230
0-1000	.05	06020	05060	05240
< > Available on special order				

Ordering Information

DC Ammeters, Self-Shielding Movement				
Range	Approx. Impedance (Ohms) @ 60 Hz	Model / Size and Catalog Number		
		2-1/2" Model 127	3-1/2" Model 27	4-1/2" Model 29
0-1	.050	01680	00230	00450
0-1.5	.033	01690	00240	00460
0-2	.025	01709	00250	00470
0-3	.0166	01710	00260	00480
0-5	.010	01720	00270	00490
0-10	.005	01730	00280	00500
0-15	.0033	01740	00290	00512
0-25	.0020	01750	00300	00520
0-30	.0017	01760	00310	00530
0-50	.001	01770	00320	00540
0-75	10.0	01780 †	00330 †	00550 †
0-100	10.0	01790 †	00340 †	00560 †
0-150	10.0	01800 †	00350 †	00570 †
0-200	10.0	01810 †	< >	00580 †
0-250	10.0	< >	< >	00590 †
0-300	10.0	< >	00380 †	00600 †
0-500	10.0	< >	00390 †	00610 †
0-750	10.0	< >	00400 †	00620 †
0-1000	10.0	< >	00410 †	00630 †
15-0-15	.0033	< >	< >	00640
30-0-30	.0017	01880	00430	00650
50-0-50	.001	01890	00440	00660

< > Available on special order

† DC current meters are self-contained for ranges up to and including 50 amperes.

Higher range DC current meters (50 mV) listed above are calibrated for 5' leads and require external shunts.

Ordering Information

AC Microammeters Rectifier Type, Self-Shielding Movement				
Range	Approx. Impedance (Ohms) @ 60 Hz	Model / Size and Catalog Number		
		2-1/2" Model 147	3-1/2" Model 47	4-1/2" Model 49
0-100	3400	< >	04120	04160
0-200	2400	< >	< >	04170
0-300	1800	< >	04140	04180
0-500	1200	< >	04150	04190
< > Available on special order				

AC Milliammeters, Iron Vane Movement				
Range	Approx. Impedance (Ohms) @ 60 Hz	Model / Size and Catalog Number		
		2-1/2" Model 157	3-1/2" Model 57	4-1/2" Model 59
0-10	650.0	< >	05440	05510
0-15	887.0	< >	05499	< >
0-25	270.0	< >	05460	05530
0-50	80.0	06130	05470	05540
0-100	17.2	06140	05480	05550
0-250	3.1	06150	05490	05560
0-500	.9	06152	05500	05570
< > Available on special order				

Ordering Information

AC Milliammeters Rectifier Type, Self Shielding Movement				
Range	Approx. Impedance (Ohms) @ 60 Hz	Model / Size and Catalog Number		
		2-1/2" Model 147	3-1/2" Model 47	4-1/2" Model 49
0-1	600	< >	06850	06880
0-2	400	< >	06860	06890
0-5	200	< >	06870	06900
< > Available on special order				

AC Ammeters, Iron Vane Movement				
Range	Approx. Impedance (Ohms) @ 60 Hz	Model / Size and Catalog Number		
		2-1/2" Model 157	3-1/2" Model 57	4-1/2" Model 59
0-1	.213	02270	01120	01290
0-1.5	.105	< >	01130	01302
0-2	.065	02290	01140	01310
0-3	.028	02300	01145	01320
0-5	.008	02310	01160	01330
0-10	.004	02320	01170	01340
0-15	.0025	02330	01180	01350
0-25	.002	02340	01190	01360
0-30	.0015	02350	01200	01370
0-50	.001	02360	01210	01380
0-75	.0002	< >	03434	03436
0-75	.008	02370 †	< >	< >
0-100	.008	02380 †	01230 †	01400 †
0-150	.008	02390 †	01240 †	01410 †
0-200	.008	< >	01250 †	01420 †
0-250	.008	02410 †	01260 †	01430 †
0-300	.008	02420 †	01270 †	01440 †
0-500	.008	02422 †	01280 †	01450 †
< > Available on special order				
† These meters are 5 amp meters with scales as indicated and require external donut transformers				

Ordering Information

AC Voltmeters Rectifier Type, Self Shielding Movement				
Range	Approx. Impedance (Ohms) @ 60 Hz	Model / Size and Catalog Number		
		2-1/2" Model 147	3-1/2" Model 47	4-1/2" Model 49
0-1	2000 Ohms per Volt	< >	08120	08300
0-3		< >	08130	08310
0-5		< >	< >	08320
0-10		< >	< >	08330
0-15		< >	< >	08340
0-50		< >	< >	08350
0-100		< >	08180	08360
0-150		< >	08190	08370
0-300		< >	< >	08371
< > Available on special order				

AC Voltmeters, Iron Vane Movement				
Range	Approx. Impedance (Ohms) @ 60 Hz	Model / Size and Catalog Number		
		2-1/2" Model 157	3-1/2" Model 57	4-1/2" Model 59
0-1.5	3	< >	< >	08710
0-3	12	< >	08540	08720
0-5	33	09390	08550	08730
0-10	133	09400	08566	08740
0-15	300	09420	08580	08750
0-25	833	09440	08599	08760
0-50	3,333	09450	08610	08770
0-100	16,166	09460	08620	08780
0-150	25,000	09470	08630	08790
0-250	41,166	09490	08650	08800
0-300	50,000	09500	08660	08810
0-500	83,333	09520 †	08680 †	08820 †
0-750	125,000	< >	08690 †	08830 †
0-1000	166,666	< >	08700 †	08840 †
† External multipliers, Model 183 are furnished on AC meters having a range of 500 volts or higher. All others have self contained multipliers.				
< > Available on special order				

Rectangular Style Analog Panel Meters

Specifications	
Accuracy	±2% full scale (iron-vane), ±3% (rectifier)
Wattmeters:	±2% full scale; Compensated meters: ±3% full scale
Movement	Model 57, 59, 157 Iron-vane, magnetically damped Wattmeters: Dynamometer All others: Annular, rectifier type, self-shielding
Suspension	Pivot and jewel; "T" styles: taut band
Tracking	±3%
Shielding	Calibration is unaffected by magnetic panel mounting
Response Time	1.5 seconds maximum
Overload (1 sec.)	10 times F.S.
Overload (Continuous)	1.5 times F.S.
Repeatability	2 %, tautband: .5%
Dial	Sharp clear scale. Each dial arc is calibrated to track the specific type of movement used
Resistance	±15% of meter impedance
Pointer	Spade pointer with black, matte finish
Scale Length	Models 177 & 157: 1.6" (40.6mm)
	Models 147, 127 & 127T: 1.8" (45.7mm)
	Models 57 & 77: 2.3" (58.4mm)
	Models 27, 27T & 47: 2.5" (63.5mm)
	Models 59 & 79: 3.50" (89.0mm)
	Models 29, 29T & 49: 3.9" (99.0mm)
Net Weight	Models 57 & 157: 5 oz. (0.14 kg)
	Model 127, 127T & 147: 7 oz. (0.20 kg)
	Models 27, 27T, 47 & 59: 8 oz. (0.23 kg)
	Models 77 & 177: 9 0z. (0.26 kg)
	Models 29, 29T & 49: 11 oz. (0.31 kg)
	Model 79: 12 oz. (0.34 kg)

Frequency Meter Specifications	
Accuracy	45-55 Hz ± 0.3 Hz (120V-240V)
	55-65 Hz ± 0.3 Hz (120V-240V)
	380-420 Hz ± 1.2 Hz (120V-240V)
Movement	Small core magnet, self-shielding
Suspension	Pivot and jewel
Shielding	Calibration is unaffected by magnetic panel mounting
Center Scale Value	50/60/400 Hz
Power Consumption	1.6 VA
Warm-up Time	5 minutes
Max. Input: Voltage (10 sec)	150, 120V normal
	280, 240V normal
Dial	Sharp clear scale. Each dial arc is calibrated to track the specific type of movement used
Case	High density black plastic
Operating Temperature	-4ºF to + 149ºF (-20ºC to + 65ºC)
Pointer	Spade pointer with black, matte finish
Scale Length	Model 187: 1.8” (45.7mm)
	Model 89: 3.5” (89.0mm)
	Model 87: 3.9” (99.0mm)
Net Weight	Model 187: 5 oz. (0.14 kg)
	Model 87: 8 oz. (0.23 kg)
	Model 89: 11 oz. (0.31 kg)

Rectangular Style Analog Panel Meters

MADE IN THE USA SINCE 1936 RELIABILITY BEYOND MEASURE

Dimensions

3-1/2" Model 27 & 27T, 47, 57, & 87

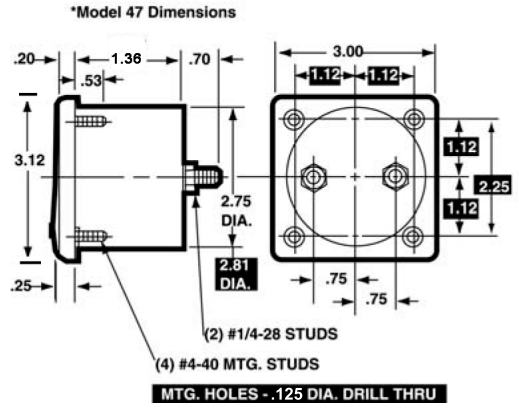

3-1/2" Model 77

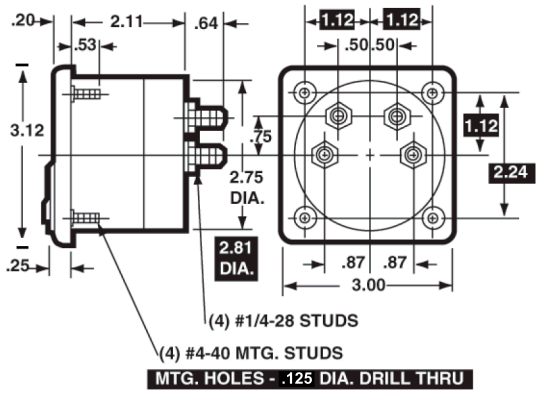

4-1/2" Model 29 & 29T, 49, 59, & 89

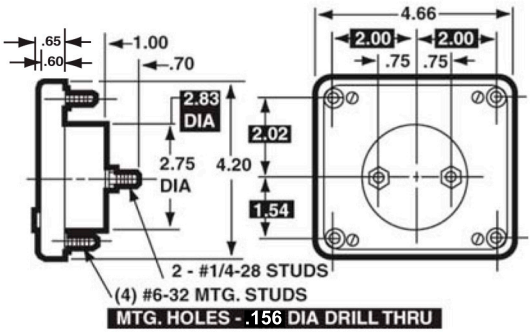

4-1/2" Model 79

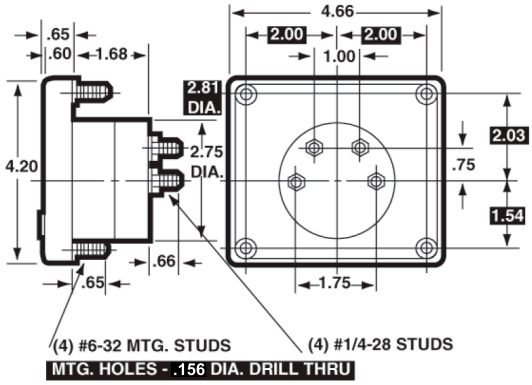

2-1/2" Model 177

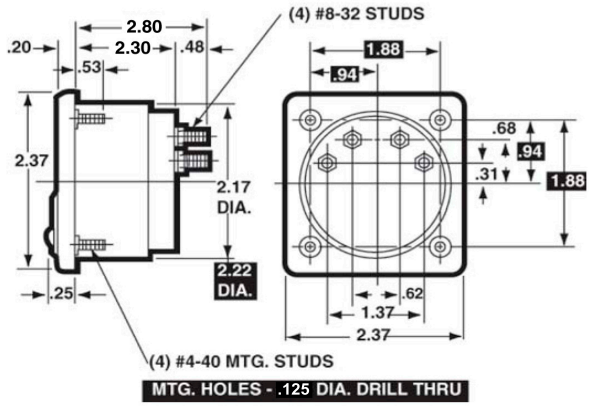
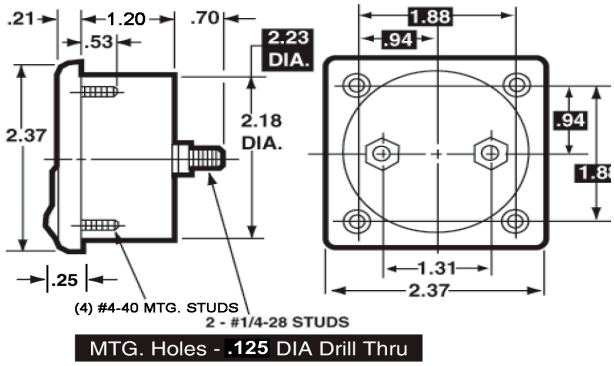
2-1/2" Model 127 & 127T, 147, 157, & 187