REVISIONS					
REV	ECO	DESCRIPTION	DATE	BY	APPR
01	-	RELEASE NEW DWG FORMAT	-	-	-

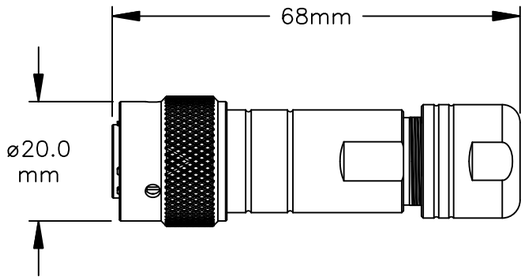

ASSEMBLED VIEW

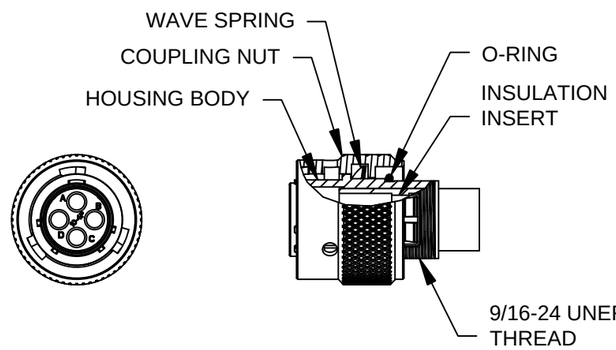

ILLUSTRATION: COMPLETE KIT

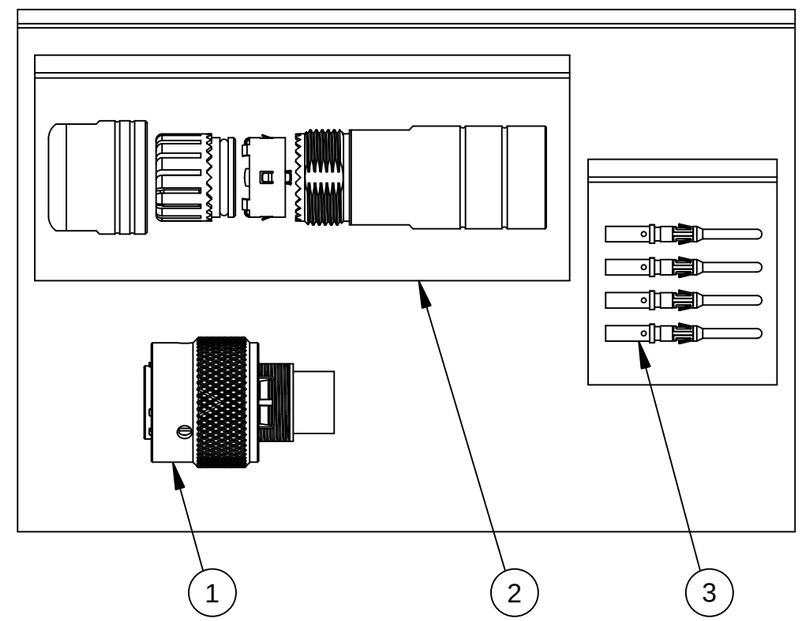

NOTES:

1) CORD GRIP RANGE: 3mm TO 6.5mm

2) CONTACT BARREL RANGE: 16AWG TO 18AWG

3) RECOMMENDED CRIMP TOOLS:
   HAND CRIMPER: MFX-3959
   PNEUMATIC CRIMPER: MFX-3960

4) EXTRACTION TOOL: QXRT16

5) MATERIALS:
   HOUSING BODY: ZINC DIE CAST, NICKEL PLATED
   COUPLING NUT: ALUMINUM ALLOY, NICKEL PLATED
   WAVE SPRING: STAINLESS STEEL
   INSULATION INSERT: PA66, UL94/V-0
   CONTACT: BRASS, GOLD FLASH PLATED
   SEAL AND O-RING: NBR (NITRILE BUTADIENE RUBBER)

6) ELECTRICAL DATA:
   a) CURRENT (MAX): 13A
   b) VOLTAGE (MAX): 250V AC/DC
   c) INSULATION RESISTANCE (MIN): 5000M OHMS
   d) TEST VOLTAGE (BETWEEN CONTACTS): 3050V

7) TECHNICAL DATA:
   a) TEMPERATURE RANGE: -40°C TO 105°C
   b) PROTECTION: IP67 (MATED CONDITION)
   c) MATING CYCLES: >500
   d) VIBRATION RESISTANCE PER MIL-STD-202 METHOD 204
   e) THERMAL SHOCK PER MIL-STD-202 METHOD 207
   f) 48 HOUR SALT SPRAY PER MIL-STD-202 METHOD 101

8) RoHS COMPLIANT

QUANTITY	PART NUMBER	DESCRIPTION	ITEM
4	MP16M23F	CONTACT, PIN, SIZE 16	3
1	RT0L-10CG-S1	CORD GRIP	2
1	RT06104PNH	CONNECTOR	1

MATERIALS LIST

UNLESS OTHERWISE SPECIFIED
1) All dimensions are in metric(mm).
2) Tolerances are as follows:
1 PL DEC ±0.30 | Fractions ±1/64
2 PL DEC ±0.15 | Angles ±1°
3 PL DEC ±0.08
3) Note reference = X

MATERIAL SPECIFICATIONS:

PROCESS SPECIFICATIONS:

NEXT ASS'Y:

SIGNATURES		DATE
DRAWN:	MRF	10SEP13
CHECKED:		
ENGINEER:		
APPROVAL:		
CUSTOMER:		

THIS DRAWING IS SUPPLIED FOR INFORMATION ONLY. DESIGN FEATURES, SPECIFICATIONS AND PERFORMANCE DATA SHOWN HEREON ARE THE PROPERTY OF THE AMPHENOL CORPORATION. NO RIGHTS OF REPRODUCTION ARE IMPLIED. ALL DIMENSIONS ARE SUBJECT TO NORMAL MANUFACTURING VARIATIONS.

Amphenol

Sine Systems - www.amphenol-sine.com
44724 Morley Drive
Clinton Township, MI 48036

KIT, ECO-MATE

SIZE	TYPE	DWG NO:	REVISION
B	C-	RT06104PNH-K	01

SCALE: NONE

SHEET 1 OF 1

TITLE: KIT, ECO-MATE

DWG NO:

REV: 01

SH: 1

OF: 1