556 Series

Class 1, Div 2 Panel Mount Indicators

Certifications & Ratings

- UL 1598 (E156890)
- IP66
- NEMA 4X
- RoHS Compliant w/6C exemption
- IK07

Application

The 556 Series LED Panel Mount Indicators incorporate both InGaN and AlInGaP technologies to offer maximum light output. This is a highly durable package, designed to withstand outdoor applications susceptible to rain, dust and sunlight. In addition, the Class I, Division 2 rating allows for use in hazardous environments common to the oil and gas, mining, and chemical industries:

- Instrument panels
- Safety applications
- UL 508 panel applications
- Petrochemical applications
- Environmental Monitoring Equipment specifications
- Pump system controllers
- Mining application
- Oil Refineries
- Agricultural controls
- Power generators

. . . and many more!

Dimensions

inches [mm]

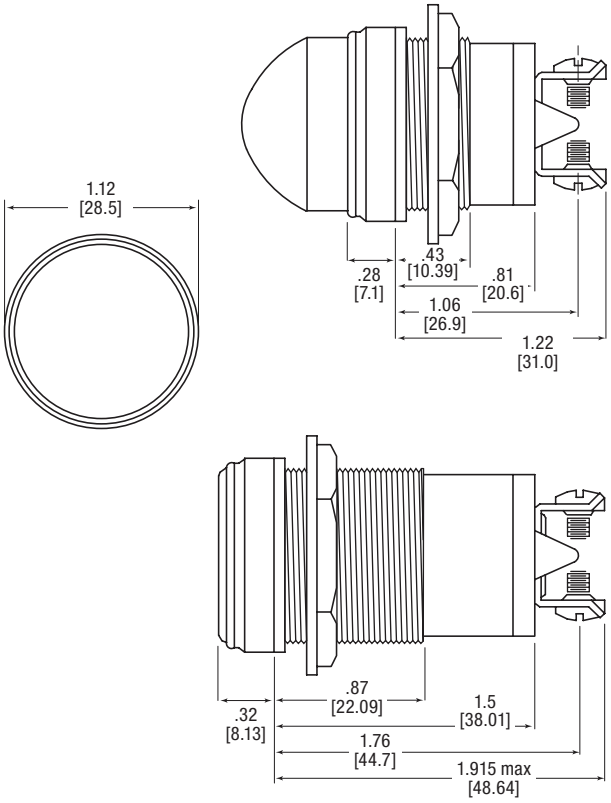

Mechanical information

Mounting Hole Size:	1.0" (25.4 mm)
Max Panel Thickness:	Flat: 0.600" (15.24 mm) Dome: 0.187" (4.27 mm)
Mounting Torque:	40 in-lbs

Specifications

Voltage Options:	12 to 125 VDC, and 125, 230 VAC (no resistor required)
Operating Temp:	-30 °C to +85 °C (-22 °F to +185 °F)
Storage Temp:	-40 °C to +100 °C (-40 °F to +212 °F)
Electrical Connection:	6-32 screw terminals
Housing:	Brass—White or Black Nickel Plated
Terminals:	Brass — Hot solder dip per Mil-F-14072D, M258, Type II
Lens Material:	Transparent Polycarbonate (UL 94V-0)
Lock Washer:	Phosphor Bronze — White or Black Nickel Plated
Nut:	Brass—White or Black Nickel Plated

Dialight reserves the right to make changes at any time in order to supply the best product possible. The most current version of this document will always be available at: www.dialightsignalsandcomponents.com

Warranty Statement: Except for the warranty expressly provided for [herein/above/below], Dialight disclaims any and all other warranties, express or implied, including, without limitation, any warranties of merchantability, fitness for a particular purpose, title, and noninfringement.

Dialight

Ordering Information
556 Series—Class 1, Div 2

Part Number Guide 556 Series

RoHS Compliant

5 5 6 - X X X X - X 2 4 F

Lens Style

Flat	1
Domed	3

Color

White	0	0
Red	5	0
Green	6	0
Cyan	6	8
Yellow	7	0
Blue	8	0
Orange	9	0

Voltage

3	12 VDC
4	24 VDC
8	37.5 VDC
6	72 VDC
7	125 VDC
5	125 VAC
9	230 VDC

Plating

2	Black
3	White

Flat Lens		Domed Lens					
White Nickel	Black Nickel	White Nickel	Black Nickel	Color	Voltage	Typ Current (mA)	Typical Intensity (mcd)
556-1003-324F	556-1003-224F	556-3003-324F	556-3003-224F	White	12 VDC	60	6900
556-1503-324F	556-1503-224F	556-3503-324F	556-3503-224F	Red		95	5100
556-1603-324F	556-1603-224F	556-3603-324F	556-3603-224F	Green		60	6900
556-1683-324F	556-1683-224F	556-3683-324F	556-3683-224F	Cyan		60	6900
556-1703-324F	556-1703-224F	556-3703-324F	556-3703-224F	Yellow		95	5100
556-1803-324F	556-1803-224F	556-3803-324F	556-3803-224F	Blue		60	2000
556-1903-324F	556-1903-224F	556-3903-324F	556-3903-224F	Orange		95	5100
556-1004-324F	556-1004-224F	556-3004-324F	556-3004-224F	White	24 VDC	32	6900
556-1504-324F	556-1504-224F	556-3504-324F	556-3504-224F	Red		46	5100
556-1604-324F	556-1604-224F	556-3604-324F	556-3604-224F	Green		32	6900
556-1684-324F	556-1684-224F	556-3684-324F	556-3684-224F	Cyan		32	6900
556-1704-324F	556-1704-224F	556-3704-324F	556-3704-224F	Yellow		46	5100
556-1804-324F	556-1804-224F	556-3804-324F	556-3804-224F	Blue		32	2000
556-1904-324F	556-1904-224F	556-3904-324F	556-3904-224F	Orange		46	2000
556-1508-324F	556-1508-224F	556-3508-324F	556-3508-224F	Red	37.5 VDC	20	4500
556-1608-324F	556-1608-224F	556-3608-324F	556-3608-224F	Green		16	6900
556-1708-324F	556-1708-224F	556-3708-324F	556-3708-224F	Yellow		20	4500
556-1006-324F	556-1006-224F	556-3006-324F	556-3006-224F	White	72 VDC	18.5	5100
556-1506-324F	556-1506-224F	556-3506-324F	556-3506-224F	Red		18.5	4500
556-1606-324F	556-1606-224F	556-3606-324F	556-3606-224F	Green		16	5100
556-1706-324F	556-1706-224F	556-3706-324F	556-3706-224F	Yellow		20	4500
556-1806-324F	556-1806-224F	556-3806-324F	556-3806-224F	Blue		18.5	1700
556-1007-324F	—	556-3007-324F	—	White	125 VDC	10.5	3100
556-1507-324F	—	556-3507-324F	—	Red		10	1200
556-1607-324F	—	556-3607-324F	—	Green		10	1700
556-1707-324F	—	556-3707-324F	—	Yellow		10	1200
556-1005-324F	—	556-3005-324F	—	White	125 VAC	11	3100
556-1505-324F	—	556-3505-324F	—	Red		10.5	2000
556-1605-324F	—	556-3605-324F	—	Green		9.5	3100
556-1685-324F	—	556-3685-324F	—	Cyan		9.5	3100
556-1705-324F	—	556-3705-324F	—	Yellow		10.5	2000
556-1805-324F	—	556-3805-324F	—	Blue		9.5	860
556-1905-324F	—	556-3905-324F	—	Orange		10.5	860
556-1009-324F	—	556-3009-324F	—	White	230 VAC	6	3100
556-1509-324F	—	556-3509-324F	—	Red		7	2000
556-1609-324F	—	556-3609-324F	—	Green		7	3100
556-1709-324F	—	556-3709-324F	—	Yellow		7	2000
556-1809-324F	—	556-3809-324F	—	Blue		7	860
556-1909-324F	—	556-3909-324F	—	Orange		7	3100