19-0247; Rev. 1; 4/97

Low-Power, 8-Channel, Serial 10-Bit ADC

MAX192

General Description

The MAX192 is a low-cost, 10-bit data-acquisition system that combines an 8-channel multiplexer, high-bandwidth track/hold, and serial interface with high conversion speed and ultra-low power consumption. The device operates with a single +5V supply. The analog inputs are software configurable for single-ended and differential (unipolar/bipolar) operation.

The 4-wire serial interface connects directly to SPI™, QSPI™, and Microwire™ devices, without using external logic. A serial strobe output allows direct connection to TMS320 family digital signal processors. The MAX192 uses either the internal clock or an external serial-interface clock to perform successive approximation A/D conversions. The serial interface can operate beyond 4MHz when the internal clock is used. The MAX192 has an internal 4.096V reference with a drift of ±30ppm typical. A reference-buffer amplifier simplifies gain trim and two sub-LSBs reduce quantization errors.

The MAX192 provides a hardwired $\overline{\text{SHDN}}$ pin and two software-selectable power-down modes. Accessing the serial interface automatically powers up the device, and the quick turn-on time allows the MAX192 to be shut down between conversions. By powering down between conversions, supply current can be cut to under 10µA at reduced sampling rates.

The MAX192 is available in 20-pin DIP and SO packages, and in a shrink-small-outline package (SSOP) that occupies 30% less area than an 8-pin DIP. The data format provides hardware and software compatibility with the MAX186/MAX188. For anti-aliasing filters, consult the data sheets for the MAX291–MAX297.

Applications

- Automotive
- Pen-Entry Systems
- Consumer Electronics
- Portable Data Logging
- Robotics
- Battery-Powered Instruments, Battery Management
- Medical Instruments

Features

- **8-Channel Single-Ended or 4-Channel Differential Inputs**
- **Single +5V Operation**
- **Low Power: 1.5mA (operating)**
  2µA (power-down)
- **Internal Track/Hold, 133kHz Sampling Rate**
- **Internal 4.096V Reference**
- **4-Wire Serial Interface is Compatible with SPI, QSPI, Microwire, and TMS320**
- **20-Pin DIP, SO, SSOP Packages**
- **Pin-Compatible 12-Bit Upgrade (MAX186/MAX188)**

See last page for Typical Operating Circuit.

SPI and QSPI are trademarks of Motorola Corp.
Microwire is a trademark of National Semiconductor Corp.

Ordering Information

PART	TEMP. RANGE	PIN-PACKAGE	INL (LSB)
MAX192ACPP	0°C to +70°C	20 Plastic DIP	±1/2
MAX192BCPP	0°C to +70°C	20 Plastic DIP	±1
MAX192ACWP	0°C to +70°C	20 Wide SO	±1/2
MAX192BCWP	0°C to +70°C	20 Wide SO	±1
MAX192ACAP	0°C to +70°C	20 SSOP	±1/2
MAX192BCAP	0°C to +70°C	20 SSOP	±1
MAX192AEPP	-40°C to +85°C	20 Plastic DIP	±1/2
MAX192BEPP	-40°C to +85°C	20 Plastic DIP	±1
MAX192AEWP	-40°C to +85°C	20 Wide SO	±1/2
MAX192BEWP	-40°C to +85°C	20 Wide SO	±1
MAX192AEAP	-40°C to +85°C	20 SSOP	±1/2
MAX192BEAP	-40°C to +85°C	20 SSOP	±1
MAX192AMJP	-55°C to +125°C	20 CERDIP	±1/2
MAX192BMJP	-55°C to +125°C	20 CERDIP	±1

Pin Configuration

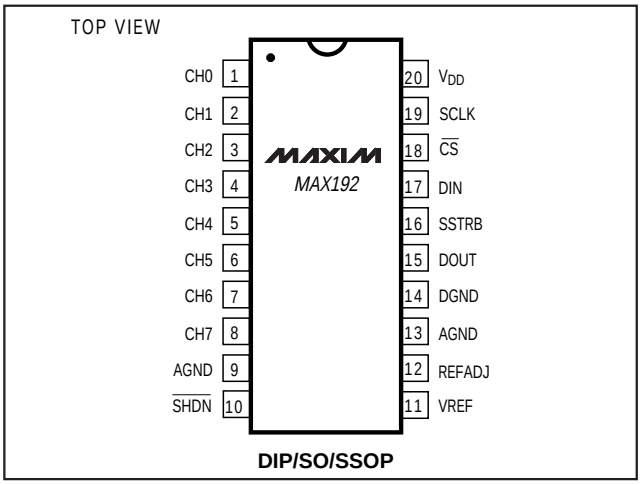

For free samples & the latest literature: http://www.maxim-ic.com, or phone 1-800-998-8800. For small orders, phone 408-737-7600 ext. 3468.

Low-Power, 8-Channel, Serial 10-Bit ADC

ABSOLUTE MAXIMUM RATINGS

V_{DD} to AGND ..... -0.3V to +6V
AGND to DGND ..... -0.3V to +0.3V
CH0–CH7 to AGND, DGND ..... -0.3V to (V_{DD} + 0.3V)
CH0–CH7 Total Input Current ..... ±20mA
VREF to AGND ..... -0.3V to (V_{DD} + 0.3V)
REFADJ to AGND ..... -0.3V to (V_{DD} + 0.3V)
Digital Inputs to DGND ..... -0.3V to (V_{DD} + 0.3V)
Digital Outputs to DGND ..... -0.3V to (V_{DD} + 0.3V)
Digital Output Sink Current 25mA

Continuous Power Dissipation (T_A = +70°C)
Plastic DIP (derate 11.11mW/°C above +70°C) 889mW
SO (derate 10.00mW/°C above +70°C) 800mW
SSOP (derate 8.00mW/°C above +70°C) 640mW
CERDIP (derate 11.11mW/°C above +70°C) 889mW
Operating Temperature Ranges
MAX192_C_P ..... 0°C to +70°C
MAX192_E_P ..... -40°C to +85°C
MAX192_MJP ..... -55°C to +125°C
Storage Temperature Range ..... -60°C to +150°C
Lead Temperature (soldering, 10sec) ..... +300°C

Stresses beyond those listed under "Absolute Maximum Ratings" may cause permanent damage to the device. These are stress ratings only, and functional operation of the device at these or any other conditions beyond those indicated in the operational sections of the specifications is not implied. Exposure to absolute maximum rating conditions for extended periods may affect device reliability.

ELECTRICAL CHARACTERISTICS

(V_{DD} = 5V ±5%, f_{CLK} = 2.0MHz, external clock (50% duty cycle), 15 clocks/conversion cycle (133ksps), 4.7µF capacitor at VREF pin, T_A = T_{MIN} to T_{MAX}, unless otherwise noted. Typical values are at T_A = +25°C.)

PARAMETER	SYMBOL	CONDITIONS	MIN	TYP	MAX	UNITS
DC ACCURACY (Note 1)						
Resolution			10			Bits
Relative Accuracy (Note 2)		MAX192A			±1/2	LSB
		MAX192B			±1	
Differential Nonlinearity	DNL	No missing codes over temperature			±1	LSB
Offset Error					±2	LSB
Gain Error		External reference, 4.096V			±2	LSB
Gain Temperature Coefficient		External reference, 4.096V		±0.8		ppm/°C
Channel-to-Channel Offset Matching				±0.1		LSB
DYNAMIC SPECIFICATIONS (10kHz sine-wave input, 4.096Vp-p, 133ksps, 2.0MHz external clock)						
Signal-to-Noise + Distortion Ratio	SINAD			66		dB
Total Harmonic Distortion (up to the 5th harmonic)	THD			-70		dB
Spurious-Free Dynamic Range	SFDR			70		dB
Channel-to-Channel Crosstalk		65kHz, V_{IN} = 4.096Vp-p (Note 3)		-75		dB
Small-Signal Bandwidth		-3dB rolloff		4.5		MHz
Full-Power Bandwidth				800		kHz
CONVERSION RATE						
Conversion Time (Note 4)	t_{CONV}	Internal clock	5.5		10	µs
		External clock, 2MHz, 12 clocks/conversion	6			
Track/Hold Acquisition Time	t_{AZ}				1.5	µs
Aperture Delay				10		ns
Aperture Jitter				<50		ps
Internal Clock Frequency				1.7		MHz

ELECTRICAL CHARACTERISTICS (continued)

(V_{DD} = 5V ±5%, f_{CLK} = 2.0MHz, external clock (50% duty cycle), 15 clocks/conversion cycle (133ksps), 4.7µF capacitor at VREF pin, $T_A = T_{MIN}$ to T_{MAX}, unless otherwise noted. Typical values are at T_A = +25°C.)

PARAMETER	SYMBOL	CONDITIONS		MIN	TYP	MAX	UNITS
External Clock Frequency		External compensation, 4.7µF		0.1		2.0	MHz
		Internal compensation (Note 5)		0.1		0.4	
		Used for data transfer only			10		
ANALOG INPUT							
Analog Input Voltage (Note 6)		Common-mode range (any input)		0		V_{DD}	V
		Single-ended range (unipolar only)		0		V_{REF}	
		Differential range	Unipolar	0		V_{REF}	
			Bipolar	$\frac{-V_{REF}}{-2}$		$\frac{+V_{REF}}{2}$	
Multiplexer Leakage Current		On/off leakage current; V_{IN} = 0V, 5V			±0.01	±1	µA
Input Capacitance		(Note 5)			16		pF
INTERNAL REFERENCE (reference buffer enabled)							
VREF Output Voltage		T_A = +25°C (Note 7)		4.066	4.096	4.126	V
VREF Short-Circuit Current						30	mA
VREF Tempco					±30		ppm/°C
Load Regulation (Note 8)		0mA to 0.5mA output load			2.5		mV
Capacitive Bypass at VREF		Internal compensation		0			µF
		External compensation		4.7			
Capacitive Bypass at REFADJ		Internal compensation		0.01			µF
		External compensation		0.01			
REFADJ Adjustment Range					±1.5		%
EXTERNAL REFERENCE AT VREF (buffer disabled, VREF = 4.096V)							
Input Voltage Range				2.5		V_{DD} + 50mV	V
Input Current					200	350	µA
Input Resistance				12	20		kΩ
Shutdown VREF Input Current					1.5	10	µA
Buffer Disable Threshold REFADJ				V_{DD} - 50mV			V
EXTERNAL REFERENCE AT REFADJ							
Capacitive Bypass at VREF		Internal compensation mode		0			µF
		External compensation mode		4.7			
Reference-Buffer Gain					1.678		V/V
REFADJ Input Current						±50	µA

Low-Power, 8-Channel, Serial 10-Bit ADC

ELECTRICAL CHARACTERISTICS (continued)

(V_{DD} = 5V ±5%, f_{CLK} = 2.0MHz, external clock (50% duty cycle), 15 clocks/conversion cycle (133ksps), 4.7µF capacitor at VREF pin, T_A = T_{MIN} to T_{MAX}, unless otherwise noted. Typical values are at T_A = +25°C.)

PARAMETER	SYMBOL	CONDITIONS	MIN	TYP	MAX	UNITS
DIGITAL INPUTS (DIN, SCLK, $\overline{CS}$, $\overline{SHDN}$)						
DIN, SCLK, $\overline{CS}$ Input High Voltage	V_{INH}		2.4			V
DIN, SCLK, $\overline{CS}$ Input Low Voltage	V_{INL}				0.8	V
DIN, SCLK, $\overline{CS}$ Input Hysteresis	V_{HYST}			0.15		V
DIN, SCLK, $\overline{CS}$ Input Leakage	I_{IN}	V_{IN} = 0V or V_{DD}			±1	µA
DIN, SCLK, $\overline{CS}$ Input Capacitance	C_{IN}	(Note 5)			15	pF
$\overline{SHDN}$ Input High Voltage	V_{INH}		V_{DD} - 0.5			V
$\overline{SHDN}$ Input Low Voltage	V_{INL}				0.5	V
$\overline{SHDN}$ Input Current, High	I_{INH}	$\overline{SHDN}$ = V_{DD}			4.0	µA
$\overline{SHDN}$ Input Current, Low	I_{INL}	$\overline{SHDN}$ = 0V	-4.0			µA
$\overline{SHDN}$ Input Mid Voltage	V_{IM}		1.5		V_{DD} - 1.5	V
$\overline{SHDN}$ Voltage, Floating	V_{FLT}	$\overline{SHDN}$ = open		2.75		V
$\overline{SHDN}$ Max Allowed Leakage, Mid Input		$\overline{SHDN}$ = open	-100		100	nA
DIGITAL OUTPUTS (DOUT, SSTRB)						
Output Voltage Low	V_{OL}	I_{SINK} = 5mA			0.4	V
		I_{SINK} = 16mA		0.3		
Output Voltage High	V_{OH}	I_{SOURCE} = 1mA	4			V
Three-State Leakage Current	I_L	$\overline{CS}$ = 5V			±10	µA
Three-State Leakage Capacitance	C_{OUT}	$\overline{CS}$ = 5V (Note 5)			15	pF
POWER REQUIREMENTS						
Positive Supply Voltage	V_{DD}			5 ±5%		V
Positive Supply Current	I_{DD}	Operating mode		1.5	2.5	mA
		Fast power-down		30	70	µA
		Full power-down		2	10	
Positive Supply Rejection (Note 9)	PSR	V_{DD} = 5V ±5%; external reference, 4.096V; full-scale input		±0.06	±0.5	mV

Note 1: Tested at V_{DD} = 5.0V; single-ended, unipolar.
Note 2: Relative accuracy is the deviation of the analog value at any code from its theoretical value after the full-scale range has been calibrated.
Note 3: Grounded on-channel; sine wave applied to all off channels.
Note 4: Conversion time defined as the number of clock cycles times the clock period; clock has 50% duty cycle.
Note 5: Guaranteed by design. Not subject to production testing.
Note 6: The common-mode range for the analog inputs is from AGND to V_{DD}.
Note 7: Sample tested to 0.1% AQL.
Note 8: External load should not change during conversion for specified accuracy.
Note 9: Measured at V_{SUPPLY} + 5% and V_{SUPPLY} - 5% only.

TIMING CHARACTERISTICS

(V_{DD} = 5V ±5%, T_A = T_{MIN} to T_{MAX}, unless otherwise noted.)

PARAMETER	SYMBOL	CONDITIONS	MIN	TYP	MAX	UNITS
Acquisition Time	t_{AZ}		1.5			µs
DIN to SCLK Setup	t_{DS}		100			ns
DIN to SCLK Hold	t_{DH}				0	ns
SCLK Fall to Output Data Valid	t_{DO}	C_{LOAD} = 100pF	20		150	ns
$\overline{CS}$ Fall to Output Enable	t_{DV}	C_{LOAD} = 100pF			100	ns
$\overline{CS}$ Rise to Output Disable	t_{TR}	C_{LOAD} = 100pF			100	ns
$\overline{CS}$ to SCLK Rise Setup	t_{CSS}		100			ns
$\overline{CS}$ to SCLK Rise Hold	t_{CSH}		0			ns
SCLK Pulse Width High	t_{CH}		200			ns
SCLK Pulse Width Low	t_{CL}		200			ns
SCLK Fall to SSTRB	t_{SSTRB}	C_{LOAD} = 100pF			200	ns
$\overline{CS}$ Fall to SSTRB Output Enable (Note 5)	t_{SDV}	External clock mode only, C_{LOAD} = 100pF			200	ns
$\overline{CS}$ Rise to SSTRB Output Disable (Note 5)	t_{STR}	External clock mode only, C_{LOAD} = 100pF			200	ns
SSTRB Rise to SCLK Rise (Note 5)	t_{SCK}	Internal clock mode only	0			ns

Note 5: Guaranteed by design. Not subject to production testing.

Typical Operating Characteristics

POWER-SUPPLY REJECTION vs. TEMPERATURE

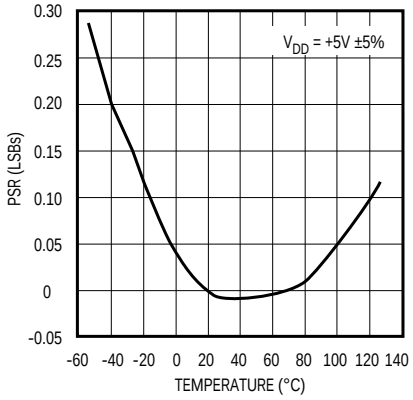

INTERNAL REFERENCE VOLTAGE vs. TEMPERATURE

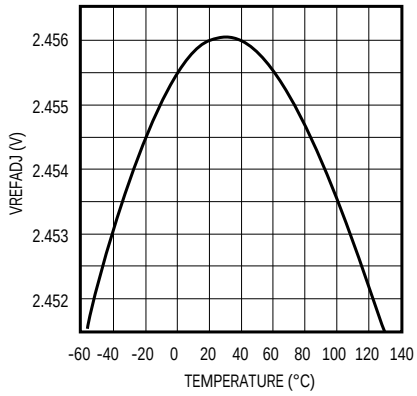

CHANNEL-TO-CHANNEL OFFSET MATCHING vs. TEMPERATURE

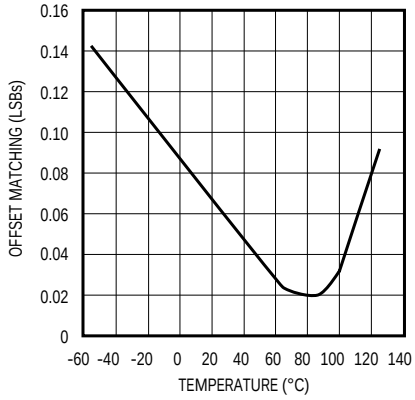

Low-Power, 8-Channel, Serial 10-Bit ADCs

Pin Description

PIN	NAME	FUNCTION
1–8	CH0–CH7	Sampling Analog Inputs
9, 13	AGND	Analog Ground. Also IN- Input for single-enabled conversions. Connect both AGND pins to analog ground.
10	$\overline{SHDN}$	Three-Level Shutdown Input. Pulling SHDN low shuts the MAX192 down to 10µA (max) supply current, otherwise the MAX192 is fully operational. Pulling SHDN high puts the reference-buffer amplifier in internal compensation mode. Letting SHDN float puts the reference-buffer amplifier in external compensation mode.
11	VREF	Reference Voltage for analog-to-digital conversion. Also, Output of the Reference Buffer Amplifier. Add a 4.7µF capacitor to ground when using external compensation mode. Also functions as an input when used with a precision external reference.
12	REFADJ	Reference-Buffer Amplifier Input. To disable the reference-buffer amplifier, tie REFADJ to V_{DD}.
14	DGND	Digital Ground
15	DOUT	Serial Data Output. Data is clocked out at the falling edge of SCLK. High impedance when $\overline{CS}$ is high.
16	SSTRB	Serial Strobe Output. In internal clock mode, SSTRB goes low when the MAX192 begins the A/D conversion and goes high when the conversion is done. In external clock mode, SSTRB pulses high for one clock period before the MSB decision. SSTRB is high impedance when $\overline{CS}$ is high (external mode).
17	DIN	Serial Data Input. Data is clocked in at the rising edge of SCLK.
18	$\overline{CS}$	Active-Low Chip Select. Data will not be clocked into DIN unless $\overline{CS}$ is low. When $\overline{CS}$ is high, DOUT is high impedance.
19	SCLK	Serial Clock Input. Clocks data in and out of serial interface. In external clock mode, SCLK also sets the conversion speed. (Duty cycle must be 40% to 60% in external clock mode.)
20	V_{DD}	Positive Supply Voltage, +5V ±5%

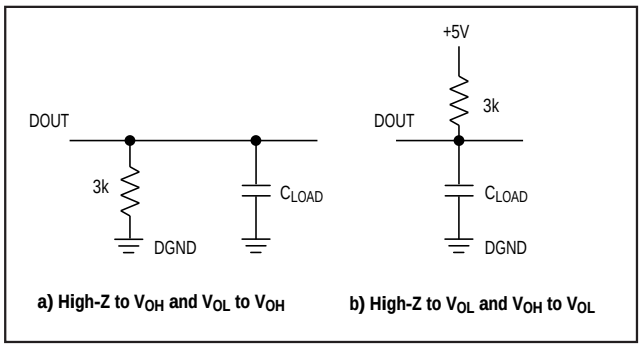

Figure 1. Load Circuits for Enable Time

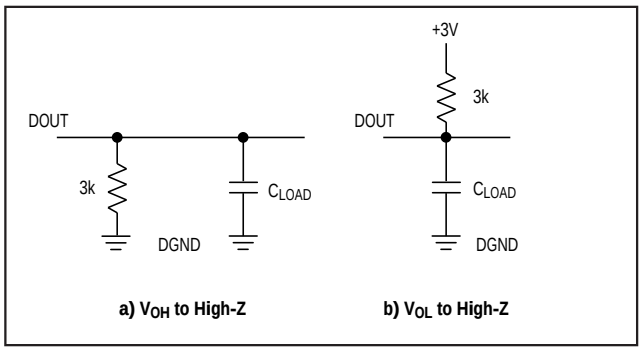

Figure 2. Load Circuits for Disabled Time

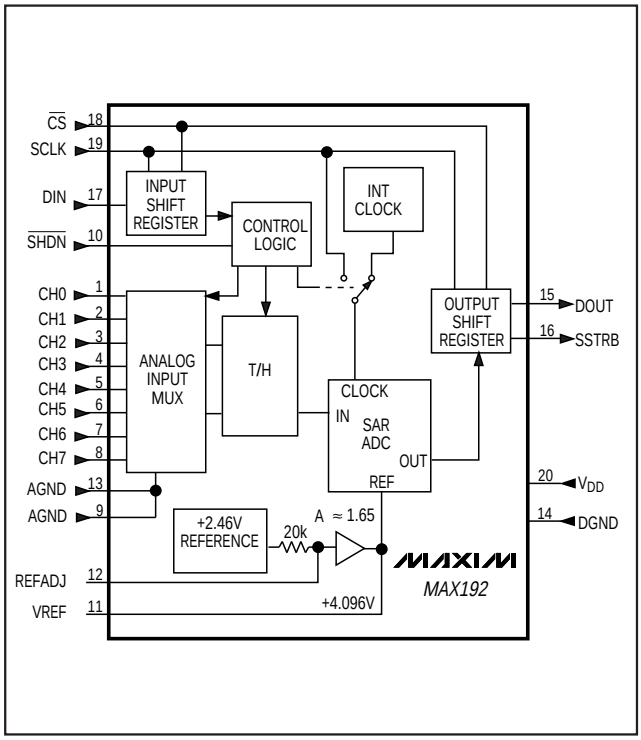

Figure 3. Block Diagram

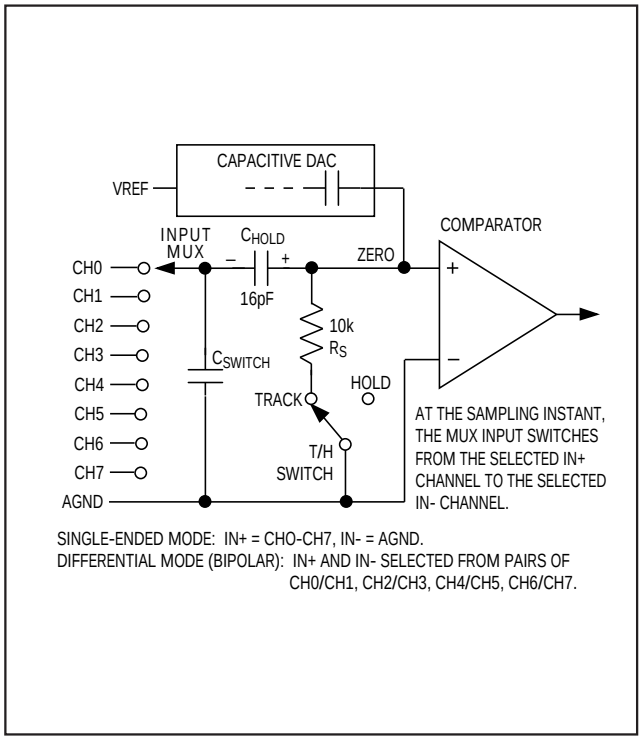

Figure 4. Equivalent Input Circuit

Detailed Description

The MAX192 uses a successive-approximation conversion technique and input track/hold (T/H) circuitry to convert an analog signal to a 10-bit digital output. A flexible serial interface provides easy interface to microprocessors. No external hold capacitors are required. Figure 3 shows the block diagram for the MAX192.

Pseudo-Differential Input

The sampling architecture of the ADC's analog comparator is illustrated in the Equivalent Input Circuit (Figure 4). In single-ended mode, IN+ is internally switched to CH0–CH7 and IN- is switched to AGND. In differential mode, IN+ and IN- are selected from pairs of CH0/CH1, CH2/CH3, CH4/CH5, and CH6/CH7. Refer to Tables 1 and 2 to configure the channels.

In differential mode, IN- and IN+ are internally switched to either one of the analog inputs. This configuration is pseudo-differential to the effect that only the signal at IN+ is sampled. The return side (IN-) must remain stable within ±0.5LSB (±0.1LSB for best results) with respect to AGND during a conversion. Accomplish this by connecting a 0.1µF capacitor from AIN- (the selected analog input, respectively) to AGND.

During the acquisition interval, the channel selected as the positive input (IN+) charges capacitor C_{HOLD}. The acquisition interval spans three SCLK cycles and ends on the falling SCLK edge after the last bit of the input control word has been entered. At the end of the acquisition interval, the T/H switch opens, retaining charge on C_{HOLD} as a sample of the signal at IN+.

The conversion interval begins with the input multiplexer switching C_{HOLD} from the positive input (IN+) to the negative input (IN-). In single-ended mode, IN- is simply AGND. This unbalances node ZERO at the input of the comparator. The capacitive DAC adjusts during the remainder of the conversion cycle to restore its node ZERO to 0V within the limits of its resolution. This action is equivalent to transferring a charge of 16pF x (V_{IN}+ - V_{IN}-) from C_{HOLD} to the binary-weighted capacitive DAC, which in turn forms a digital representation of the analog input signal.

Low-Power, 8-Channel, Serial 10-Bit ADC

Track/Hold

The T/H enters its tracking mode on the falling clock edge after the fifth bit of the 8-bit control word has been shifted in. The T/H enters its hold mode on the falling clock edge after the eighth bit of the control word has been shifted in. If the converter is set up for single-ended inputs, IN- is connected to AGND, and the converter samples the "+" input. If the converter is set up for differential inputs, IN- connects to the "-" input, and the difference of $|IN+ - IN-|$ is sampled. At the end of the conversion, the positive input connects back to IN+, and C_{HOLD} charges to the input signal.

The time required for the T/H to acquire an input signal is a function of how quickly its input capacitance is charged. If the input signal's source impedance is high, the acquisition time lengthens and more time must be allowed between conversions. Acquisition time is calculated by:

$$t_{AZ} = 9\ (R_S + R_{IN})\ 16pF$$

where R_{IN} = 5kΩ, R_S = the source impedance of the input signal, and tAZ is never less than 1.5µs. Note that source impedances below 5kW do not significantly affect the AC performance of the ADC. Higher source impedances can be used if an input capacitor is connected to the analog inputs, as shown in Figure 5. Note that the input capacitor forms an RC filter with the input source impedance, limiting the ADC's signal bandwidth.

Input Bandwidth

The ADC's input tracking circuitry has a 4.5MHz small-signal bandwidth, so it is possible to digitize high-speed transient events and measure periodic signals with bandwidths exceeding the ADC's sampling rate by using undersampling techniques. To avoid high-frequency signals being aliased into the frequency band of interest, anti-alias filtering is recommended. See the data sheets for the MAX291–MAX297 filters.

Analog Input Range and Input Protection

Internal protection diodes, which clamp the analog input to V_{DD} and AGND, allow the channel input pins to swing from AGND - 0.3V to V_{DD} + 0.3V without damage. However, for accurate conversions near full scale, the inputs must not exceed V_{DD} by more than 50mV, or be lower than AGND by 50mV.

If the analog input exceeds 50mV beyond the supplies, do not forward bias the protection diodes of off channels over 2mA.

The MAX192 can be configured for differential (unipolar or bipolar) or single-ended (unipolar only) inputs, as selected by bits 2 and 3 of the control byte (Table 3).

In the single-ended mode, set the UNI/BIP bit to unipolar. In this mode, analog inputs are internally referenced to AGND, with a full-scale input range from 0V to V_{REF}.

In differential mode, both unipolar and bipolar settings can be used. Choosing unipolar mode sets the differential input range at 0V to V_{REF}. The output code is invalid (code zero) when a negative differential input voltage is applied. Bipolar mode sets the differential input range to $\pm V_{REF}$ / 2. Note that in this differential mode, the common-mode input range includes both supply rails. Refer to Tables 4a and 4b for input voltage ranges.

Quick Look

To evaluate the analog performance of the MAX192 quickly, use Figure 5's circuit. The MAX192 requires a control byte to be written to DIN before each conversion. Tying DIN to +5V feeds in control bytes of

Table 1. Channel Selection in Single-Ended Mode (SGL/$\overline{DIF}$ = 1)

SEL2	SEL1	SEL0	CH0	CH1	CH2	CH3	CH4	CH5	CH6	CH7	AGND
0	0	0	+								–
1	0	0		+							–
0	0	1			+						–
1	0	1				+					–
0	1	0					+				–
1	1	0						+			–
0	1	1							+		–
1	1	1								+	–

Table 2. Channel Selection in Differential Mode (SGL/$\overline{\text{DIF}}$ = 0)

SEL2	SEL1	SEL0	CH0	CH1	CH2	CH3	CH4	CH5	CH6	CH7
0	0	0	+	–						
0	0	1			+	–				
0	1	0					+	–		
0	1	1							+	–
1	0	0	–	+						
1	0	1			–	+				
1	1	0					–	+		
1	1	1							–	+

Table 3. Control-Byte Format

Bit 7 (MSB)	Bit 6	Bit 5	Bit 4	Bit 3	Bit 2	Bit 1	Bit 0 (LSB)
START	SEL2	SEL1	SEL0	UNI/$\overline{\text{BIP}}$	SGL/$\overline{\text{DIF}}$	PD1	PD0

Bit	Name	Description
7(MSB)	START	The first logic "**1**" bit after $\overline{\text{CS}}$ goes low defines the beginning of the control byte.
6 5 4	SEL2 SEL1 SEL0	These three bits select which of the eight channels are used for the conversion. See Tables 1 and 2.
3	UNI/$\overline{\text{BIP}}$	**1** = unipolar, **0** = bipolar. Selects unipolar or bipolar conversion mode. In unipolar mode, an analog input signal from 0V to VREF can be converted; in differential bipolar mode, the differential signal can range from -VREF / 2 to +VREF / 2. Select differential operation if bipolar mode is used.
2	SGL/$\overline{\text{DIF}}$	**1** = single ended, **0** = differential. Selects single-ended or differential conversions. In single-ended mode, input signal voltages are referred to AGND. In differential mode, the voltage difference between two channels is measured. Select unipolar operation if single-ended mode is used. See Tables 1 and 2.
1 0(LSB)	PD1 PD0	Selects clock and power-down modes. PD1 PD0 Mode **0** **0** Full power-down (I_Q = 2µA) **0** **1** Fast power-down (I_Q = 30µA) **1** **0** Internal clock mode **1** **1** External clock mode

Low-Power, 8-Channel, Serial 10-Bit ADC

Table 4a. Unipolar Full Scale and Zero Scale

REFERENCE		ZERO SCALE	FULL SCALE
Internal Reference		0V	+4.096V
External Reference	at REFADJ	0V	V_{REFADJ} (1.678)
	at VREF	0V	V_{REF}

Table 4b. Differential Bipolar Full Scale, Zero Scale, and Negative Full Scale

REFERENCE		NEGATIVE FULL SCALE	ZERO SCALE	FULL SCALE
Internal Reference		-4.096V / 2	0V	+4.096V / 2
External Reference	at REFADJ	$-1/2V_{REFADJ}$ (1.678)	0V	$+1/2V_{REFADJ}$ (1.678)
	0.at VREF	$-1/2V_{REF}$	0V	$+1/2V_{REF}$

$FF (HEX), which trigger single-ended conversions on CH7 in external clock mode without powering down between conversions. In external clock mode, the SSTRB output pulses high for one clock period before the most significant bit of the conversion result comes out of DOUT. Varying the analog input to CH7 should alter the sequence of bits from DOUT. A total of 15 clock cycles is required per conversion. All transitions of the SSTRB and DOUT outputs occur on the falling edge of SCLK.

How to Start a Conversion

A conversion is started on the MAX192 by clocking a control byte into DIN. Each rising edge on SCLK, with $\overline{CS}$ low, clocks a bit from DIN into the MAX192's internal shift register. After $\overline{CS}$ falls, the first arriving logic "1" bit defines the MSB of the control byte. Until this first "start" bit arrives, any number of logic "0" bits can be clocked into DIN with no effect. Table 3 shows the control-byte format.

The MAX192 is compatible with Microwire, SPI, and QSPI devices. For SPI, select the correct clock polarity and sampling edge in the SPI control registers: set CPOL = 0 and CPHA = 0. Microwire and SPI both transmit a byte and receive a byte at the same time. Using the *Typical Operating Circuit*, the simplest software interface requires only three 8-bit transfers to perform a conversion (one 8-bit transfer to configure the ADC, and two more 8-bit transfers to clock out the 12-bit conversion result).

Example: Simple Software Interface

Make sure the CPU's serial interface runs in master mode so the CPU generates the serial clock. Choose a clock frequency from 100kHz to 2MHz.

1) Set up the control byte for external clock mode, call it TB1. TB1 should be of the format: 1XXXXX11 binary, where the Xs denote the particular channel and conversion-mode selected.
2) Use a general-purpose I/O line on the CPU to pull $\overline{CS}$ on the MAX192 low.
3) Transmit TB1 and simultaneously receive a byte and call it RB1. Ignore RB1.
4) Transmit a byte of all zeros ($00 HEX) and simultaneously receive byte RB2.
5) Transmit a byte of all zeros ($00 HEX) and simultaneously receive byte RB3.
6) Pull $\overline{CS}$ on the MAX192 high.

Figure 6 shows the timing for this sequence. Bytes RB2 and RB3 will contain the result of the conversion padded with one leading zero, two sub-LSB bits, and three trailing zeros. The total conversion time is a function of the serial clock frequency and the amount of dead time between 8-bit transfers. Make sure that the total conversion time does not exceed 120µs, to avoid excessive T/H droop.

Digital Output

In unipolar input mode, the output is straight binary (Figure 15). For bipolar inputs in differential mode, the output is twos-complement (Figure 16). Data is clocked out at the falling edge of SCLK in MSB-first format.

Internal and External Clock Modes

The MAX192 may use either an external serial clock or the internal clock to perform the successive-approximation conversion. In both clock modes, the external clock shifts data in and out of the MAX192. The T/H acquires the input signal as the last three bits of the control byte are clocked into DIN. Bits PD1 and PD0 of the control byte program the clock mode. Figures 7 through 10 show the timing characteristics common to both modes.

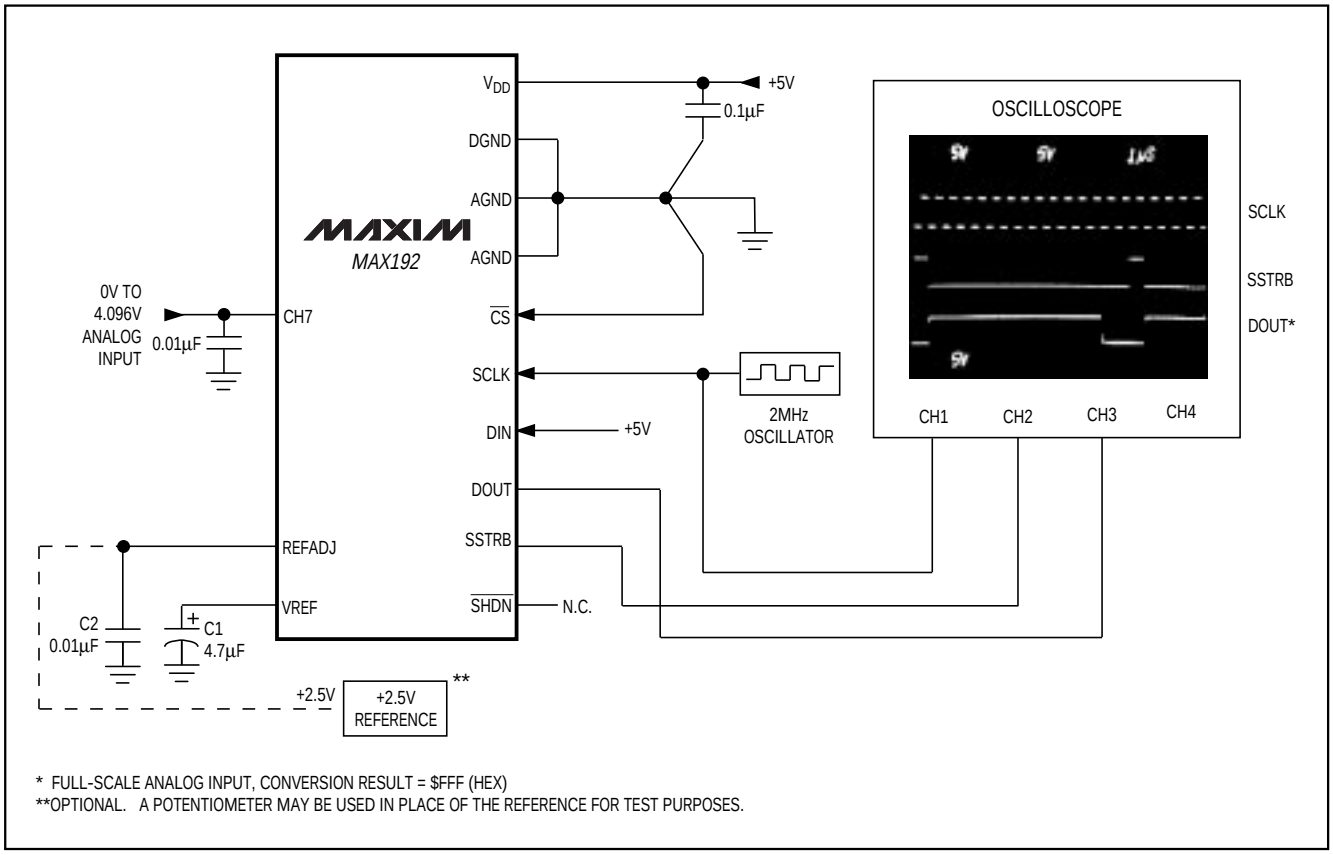

Figure 5. Quick-Look Circuit

External Clock

In external clock mode, the external clock not only shifts data in and out, it also drives the analog-to-digital conversion steps. SSTRB pulses high for one clock period after the last bit of the control byte. Successive-approximation bit decisions are made and appear at DOUT on each of the next 12 SCLK falling edges (see Figure 6). The first 10 bits are the true data bits, and the last two are sub-LSB bits.

SSTRB and DOUT go into a high-impedance state when $\overline{CS}$ goes high; after the next $\overline{CS}$ falling edge, SSTRB will output a logic low. Figure 8 shows the SSTRB timing in external clock mode.

The conversion must complete in some minimum time, or else droop on the sample-and-hold capacitors may degrade conversion results. Use internal clock mode if the clock period exceeds 10µs, or if serial-clock interruptions could cause the conversion interval to exceed 120µs.

Internal Clock

In internal clock mode, the MAX192 generates its own conversion clock internally. This frees the microprocessor from the burden of running the SAR conversion clock, and allows the conversion results to be read back at the processor's convenience, at any clock rate from zero to typically 10MHz. SSTRB goes low at the start of the conversion and then goes high when the conversion is complete. SSTRB will be low for a maximum of 10µs, during which time SCLK should remain low for best noise performance. An internal register stores data when the conversion is in progress. SCLK clocks the data out at this register at any time after the conversion is complete. After SSTRB goes high, the next falling clock edge will produce the MSB of the conversion at DOUT, followed by the remaining bits in MSB-first format (Figure 9). $\overline{CS}$ does not need to be held low once a conversion is started.

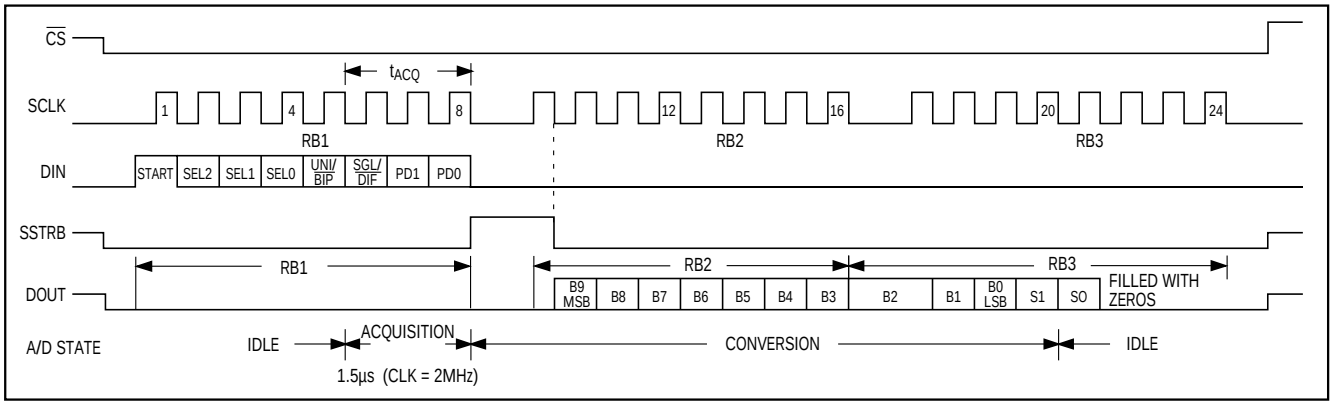

Figure 6. 24-Bit External Clock Mode Conversion Timing (SPI, QSPI and Microwire Compatible)

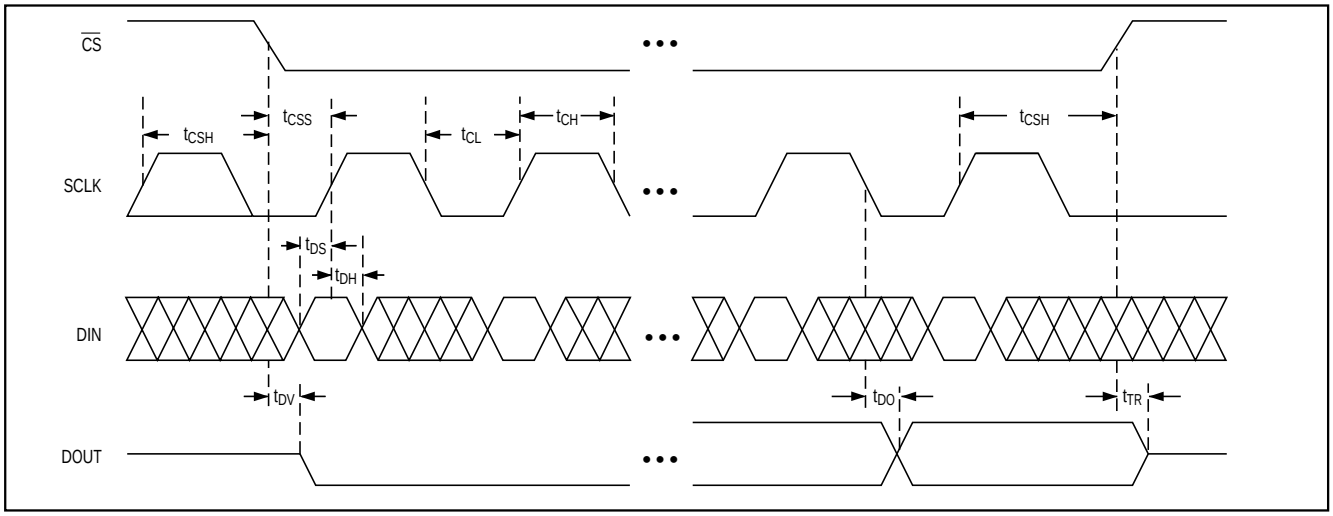

Figure 7. Detailed Serial-Interface Timing

Pulling $\overline{CS}$ high prevents data from being clocked into the MAX192 and three-states DOUT, but it does not adversely affect an internal clock-mode conversion already in progress. When internal clock mode is selected, SSTRB does not go into a high-impedance state when $\overline{CS}$ goes high.

Figure 10 shows the SSTRB timing in internal clock mode. In internal clock mode, data can be shifted in and out of the MAX192 at clock rates exceeding 4.0MHz, provided that the minimum acquisition time, t_{AZ}, is kept above 1.5µs.

Data Framing

The falling edge of $\overline{CS}$ does **not** start a conversion on the MAX192. The first logic high clocked into DIN is interpreted as a start bit and defines the first bit of the control byte. A conversion starts on the falling edge of SCLK, after the eighth bit of the control byte (the PD0 bit) is clocked into DIN. The start bit is defined as:

The first high bit clocked into DIN with $\overline{CS}$ low anytime the converter is idle, e.g. after V_{DD} is applied.

OR

The first high bit clocked into DIN after bit 3 of a conversion in progress is clocked onto the DOUT pin.

If a falling edge on $\overline{CS}$ forces a start bit before bit 3 (B3) becomes available, then the current conversion will be terminated and a new one started. Thus, the fastest the MAX192 can run is 15 clocks per conversion. Figure 11a shows the serial-interface timing necessary to perform a conversion every 15 SCLK cycles in external clock mode. If $\overline{CS}$ is low and SCLK is continuous, guarantee a start bit by first clocking in 16 zeros.

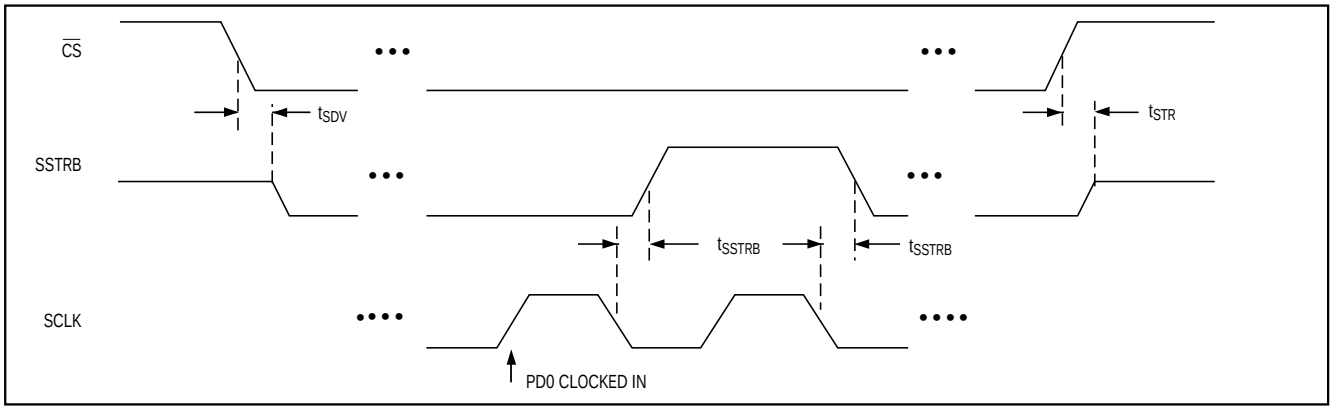

Figure 8. External Clock Mode SSTRB Detailed Timing

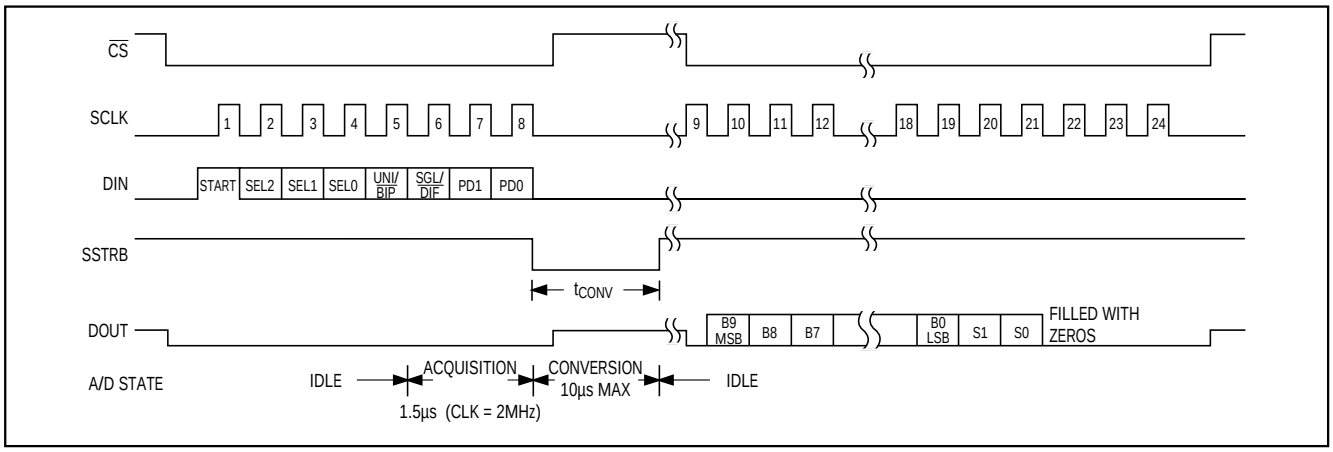

Figure 9. Internal Clock Mode Timing

Most microcontrollers require that conversions occur in multiples of 8 SCLK clocks; 16 clocks per conversion will typically be the fastest that a microcontroller can drive the MAX192. Figure 11b shows the serial-interface timing necessary to perform a conversion every 16 SCLK cycles in external clock mode.

Applications Information

Power-On Reset

When power is first applied and if $\overline{SHDN}$ is not pulled low, internal power-on reset circuitry will activate the MAX192 in internal clock mode, ready to convert with SSTRB = high. After the power supplies have been stabilized, the internal reset time is 100µs and no conversions should be performed during this phase. SSTRB is high on power-up and, if $\overline{CS}$ is low, the first logical 1 on DIN will be interpreted as a start bit. Until a conversion takes place, DOUT will shift out zeros.

Reference-Buffer Compensation

In addition to its shutdown function, the $\overline{SHDN}$ pin also selects internal or external compensation. The compensation affects both power-up time and maximum conversion speed. Compensated or not, the minimum clock rate is 100kHz due to droop on the sample-and-hold.

To select external compensation, float $\overline{SHDN}$. See the *Typical Operating Circuit*, which uses a 4.7µF capacitor at VREF. A value of 4.7µF or greater ensures stability and allows operation of the converter at the full clock speed of 2MHz. External compensation increases power-up time (see the *Choosing Power-Down Mode* section, and Table 5).

Internal compensation requires no external capacitor at VREF, and is selected by pulling $\overline{SHDN}$ high. Internal compensation allows for shortest power-up times, but is only available using an external clock and reduces the maximum clock rate to 400kHz.

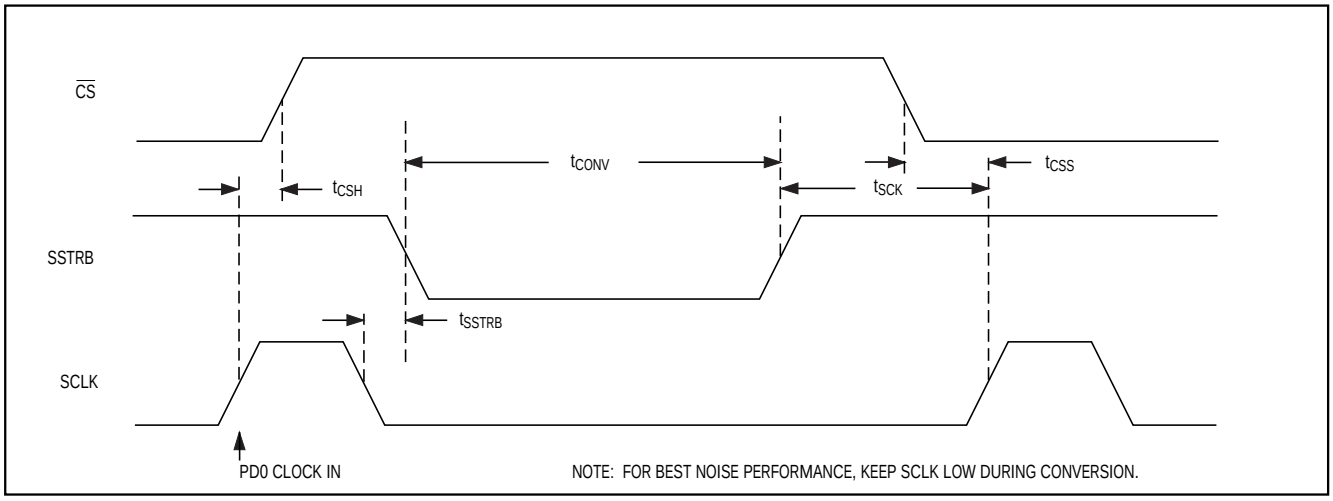

Figure 10. Internal Clock Mode SSTRB Detailed Timing

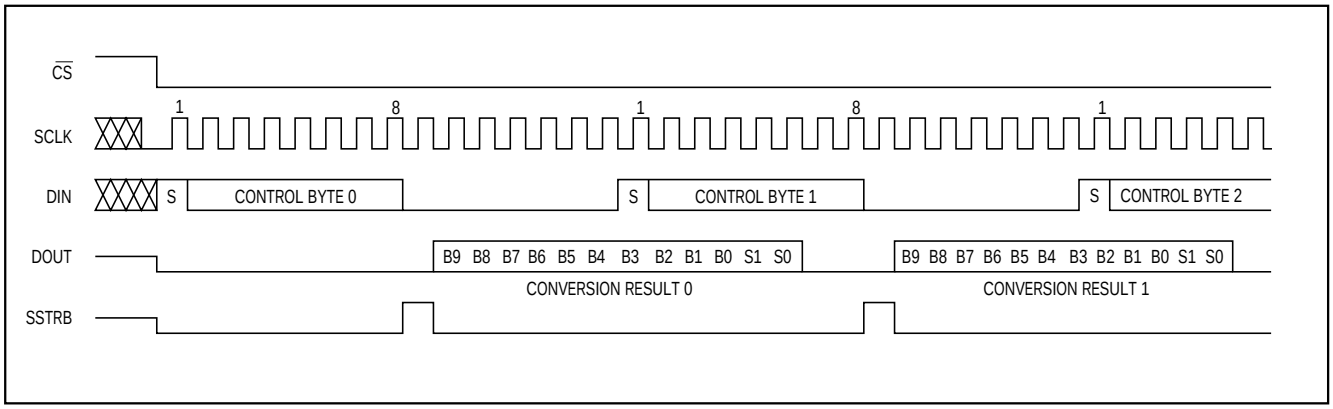

Figure 11a. External Clock Mode, 15 Clocks/Conversion Timing

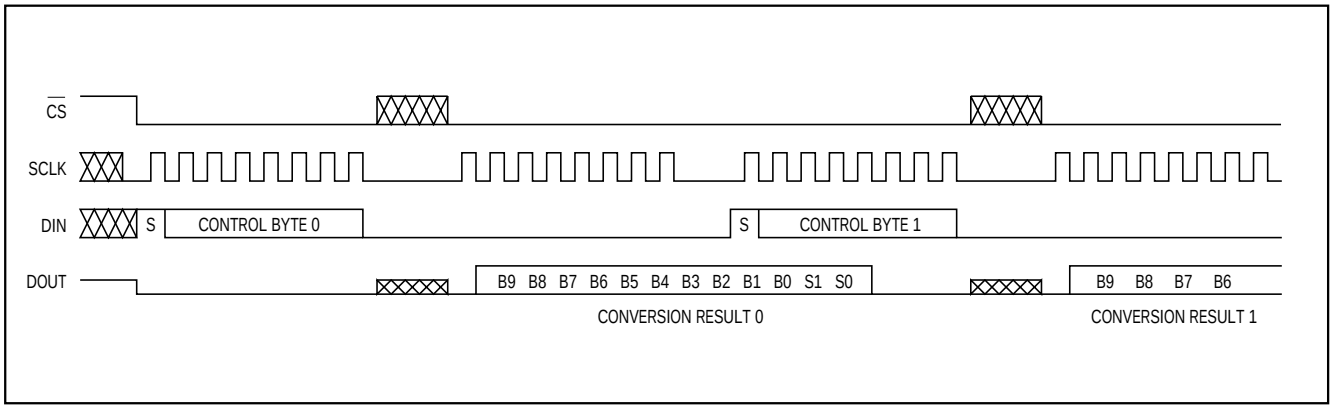

Figure 11b. External Clock Mode, 16 Clocks/Conversion Timing

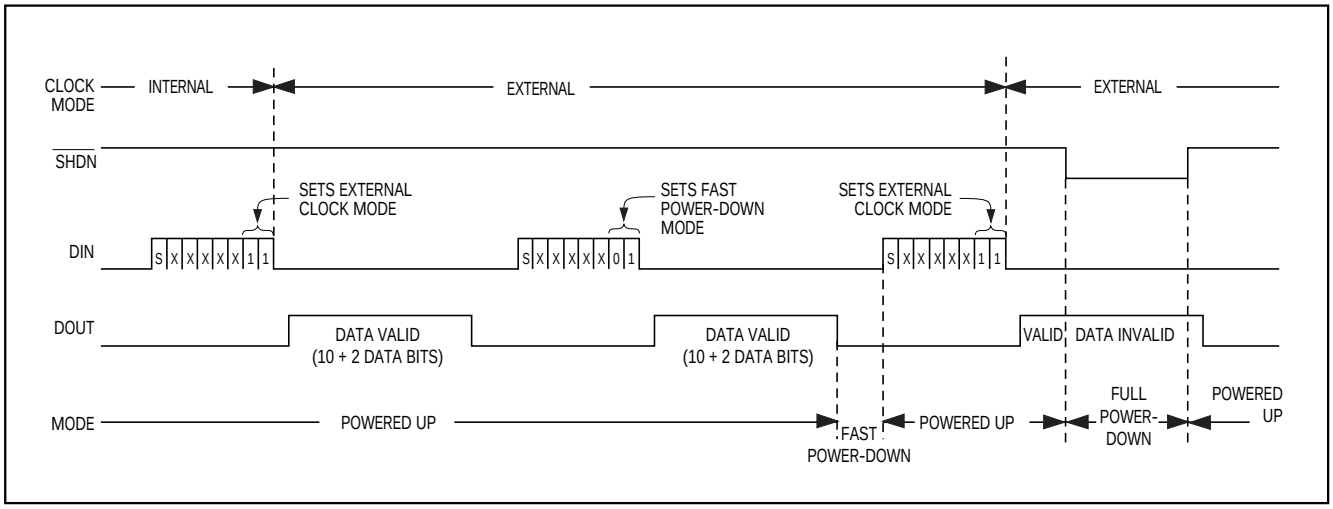

Figure 12a. Timing Diagram Power-Down Modes, External Clock

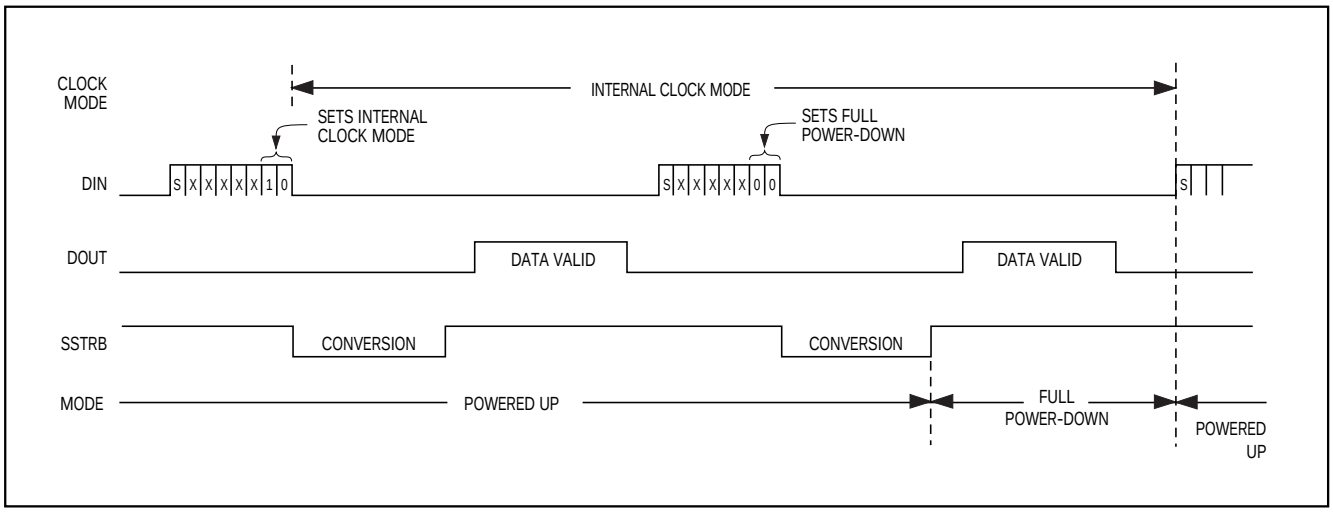

Figure 12b. Timing Diagram Power-Down Modes, Internal Clock

Power-Down

Choosing Power-Down Mode

You can save power by placing the converter in a low-current shutdown state between conversions. Select full power-down or fast power-down mode via bits 1 and 0 of the DIN control byte with $\overline{SHDN}$ either high or floating (see Tables 3 and 6). Pull $\overline{SHDN}$ low at any time to shut down the converter completely. $\overline{SHDN}$ overrides bits 1 and 0 of DIN word (see Table 7).

Full power-down mode turns off all chip functions that draw quiescent current, typically reducing I_{DD} to 2µA.

Fast power-down mode turns off all circuitry except the bandgap reference. With the fast power-down mode, the supply current is 30µA. Power-up time can be shortened to 5µs in internal compensation mode.

In both software shutdown modes, the serial interface remains operational, however, the ADC will not convert. Table 5 illustrates how the choice of reference-buffer compensation and power-down mode affects both power-up delay and maximum sample rate.

In external compensation mode, the power-up time is 20ms with a 4.7µF compensation capacitor when the capacitor is fully discharged. In fast power-down, you can eliminate start-up time by using low-leakage capaci-

Table 5. Worst-Case Power-Up Delay Times

Reference Buffer	Reference-Buffer Compensation Mode	VREF Capacitor (µF)	Power-Down Mode	Power-Up Delay (sec)	Maximum Sampling Rate (ksps)
Enabled	Internal		Fast	5µ	26
Enabled	Internal		Full	300µ	26
Enabled	External	4.7	Fast	See Figure 14c	133
Enabled	External	4.7	Full	See Figure 14c	133
Disabled			Fast	2µ	133
Disabled			Full	2µ	133

Table 6. Software Shutdown and Clock Mode

PD1	PD0	Device Mode
1	1	External Clock Mode
1	0	Internal Clock Mode
0	1	Fast Power-Down Mode
0	0	Full Power-Down Mode

Table 7. Hard-Wired Shutdown and Compensation Mode

$\overline{SHDN}$ State	Device Mode	Reference-Buffer Compensation
1	Enabled	Internal Compensation
Floating	Enabled	External Compensation
0	Full Power-Down	N/A

tors that will not discharge more than 1/2LSB while shut down. In shutdown, the capacitor has to supply the current into the reference (1.5µA typ) and the transient currents at power-up.

Figures 12a and 12b illustrate the various power-down sequences in both external and internal clock modes.

Software Power-Down

Software power-down is activated using bits PD1 and PD0 of the control byte. As shown in Table 6, PD1 and PD0 also specify the clock mode. When software shutdown is asserted, the ADC will continue to operate in the last specified clock mode until the conversion is complete. Then the ADC powers down into a low quiescent-current state. In internal clock mode, the interface remains active and conversion results may be clocked out while the MAX192 has already entered a software power-down.

The first logical 1 on DIN will be interpreted as a start bit, and powers up the MAX192. Following the start bit, the data input word or control byte also determines clock and power-down modes. For example, if the DIN word contains PD1 = 1, then the chip will remain powered up. If PD1 = 0, a power-down will resume after one conversion.

Hardware Power-Down

The $\overline{SHDN}$ pin places the converter into the full power-down mode. Unlike with the software shutdown modes, conversion is not completed. It stops coincidentally with $\overline{SHDN}$ being brought low. There is no power-up delay if an external reference is used and is not shut down. The $\overline{SHDN}$ pin also selects internal or external reference compensation (see Table 7).

Power-Down Sequencing

The MAX192 auto power-down modes can save considerable power when operating at less than maximum sample rates. The following discussion illustrates the various power-down sequences.

Lowest Power at up to 500 Conversions/Channel/Second

The following examples illustrate two different power-down sequences. Other combinations of clock rates, compensation modes, and power-down modes may give lowest power consumption in other applications.

Figure 14a depicts the MAX192 power consumption for one or eight channel conversions utilizing full power-down mode and internal reference compensation. A 0.01µF bypass capacitor at REFADJ forms an

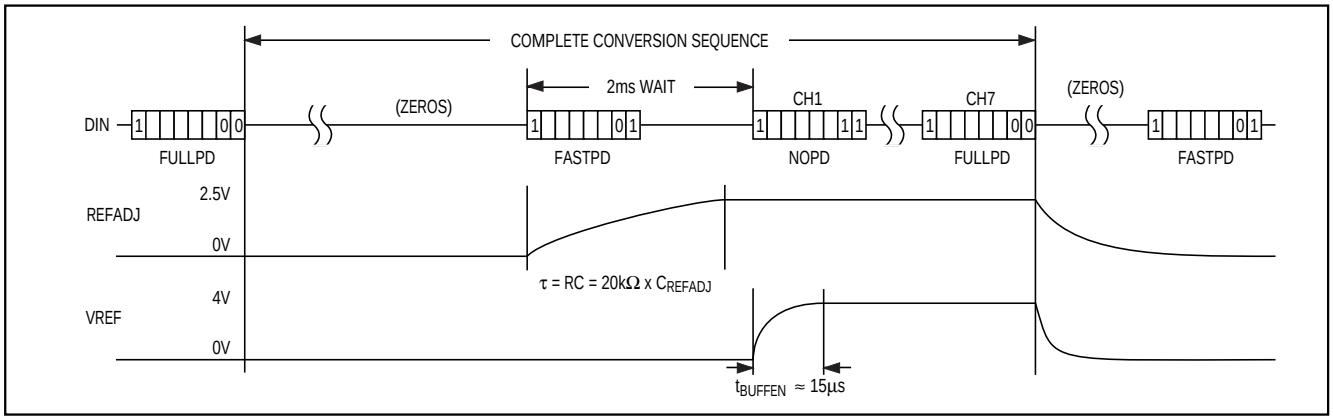

Figure 13. FULLPD/FASTPD Power-Up Sequence

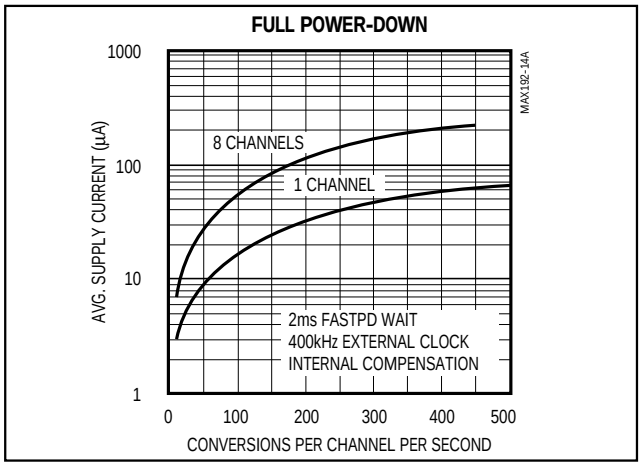

Figure 14a. Supply Current vs. Sample Rate/Second, FULLPD, 400kHz Clock

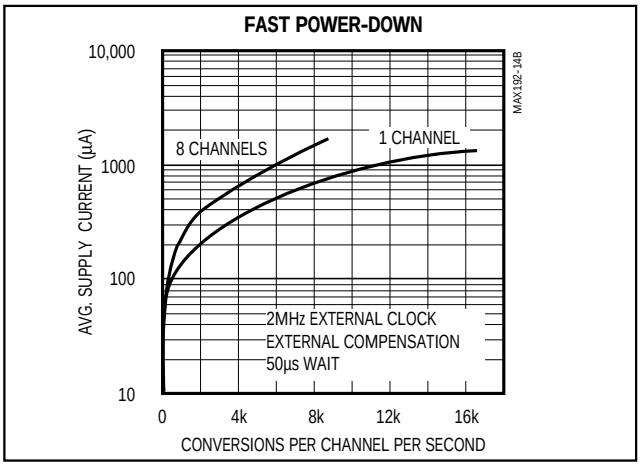

Figure 14b. Supply Current vs. Sample Rate/Second, FASTPD, 2MHz Clock

RC filter with the internal 20kΩ reference resistor with a 0.2ms time constant. To achieve full 10-bit accuracy, 10 time constants or 2ms are required after power-up. Waiting 2ms in FASTPD mode instead of full power-up will reduce the power consumption by a factor of 10 or more. This is achieved by using the sequence shown in Figure 13.

Lowest Power at Higher Throughputs

Figure 14b shows the power consumption with external-reference compensation in fast power-down, with one and eight channels converted. The external 4.7µF compensation requires a 50µs wait after power-up, accomplished by 75 idle clocks after a dummy conversion. This circuit combines fast multi-channel conversion with lowest power consumption possible. Full power-down mode may provide increased power savings in applications where the

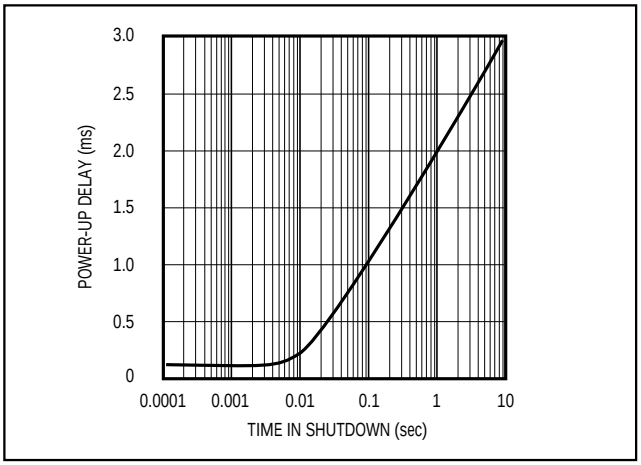

Figure 14c. Typical Power-Up Delay vs. Time in Shutdown

Low-Power, 8-Channel, Serial 10-Bit ADC

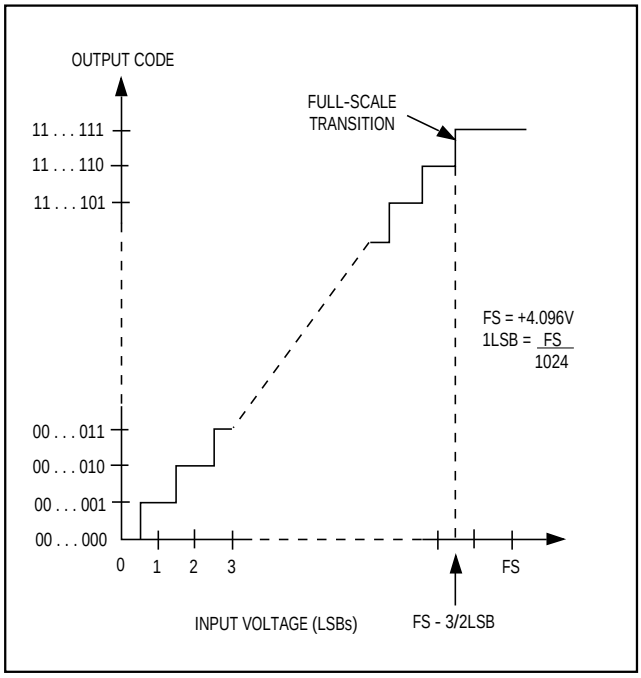

Figure 15. Unipolar Transfer Function, 4.096V = Full Scale

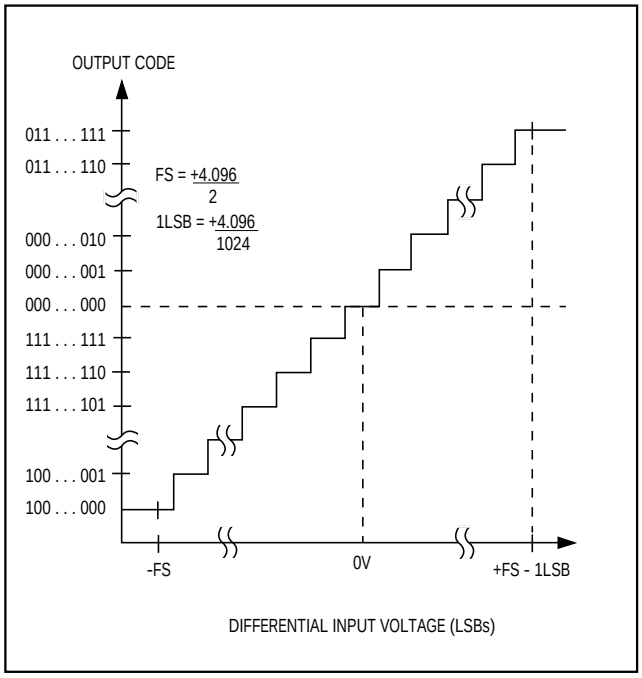

Figure 16. Differential Bipolar Transfer Function, ±4.096V / 2 = Full Scale

MAX192 is inactive for long periods of time, but where intermittent bursts of high-speed conversions are required.

External and Internal References

The MAX192 can be used with an internal or external reference. Diode D1 shown in the *Typical Operating Circuit* ensures correct start-up. Any standard signal diode can be used. An external reference can either be connected directly at the VREF terminal or at the REFADJ pin.

The MAX192's internally trimmed 2.46V reference is buffered with a gain of 1.678 to scale an external 2.5V reference at REFADJ to 4.096V at VREF.

Internal Reference

The full-scale range of the MAX192 with internal reference is 4.096V with unipolar inputs, and ±2.048V with differential bipolar inputs. The internal reference voltage is adjustable to ±1.5% with the Reference-Adjust Circuit of Figure 17.

External Reference

An external reference can be placed at either the input (REFADJ) or the output (VREF) of the internal buffer amplifier. The REFADJ input impedance is typically 20kΩ. At VREF, the input impedance is a minimum of 12kΩ for DC currents. During conversion, an external reference at VREF must be able to deliver up to 350µA DC load current and have an output impedance of 10Ω or less. If the reference has higher output impedance or is noisy, bypass it close to the VREF pin with a 4.7µF capacitor.

Using the buffered REFADJ input avoids external buffering of the reference. To use the direct VREF input, disable the internal buffer by tying REFADJ to V_{DD}.

Transfer Function and Gain Adjust

Figure 15 depicts the nominal, unipolar input/output (I/O) transfer function, and Figure 16 shows the differential bipolar input/output transfer function. Code transitions occur halfway between successive integer LSB values. Output coding is binary with 1LSB = 4.00mV (4.096V / 1024) for unipolar operation and 1LSB = 4.00mV [(4.096V / 2 - -4.096V / 2)/1024] for bipolar operation.

Figure 17, the Reference-Adjust Circuit, shows how to adjust the ADC gain in applications that use the internal reference. The circuit provides ±1.5% (±15LSBs) of gain adjustment range.

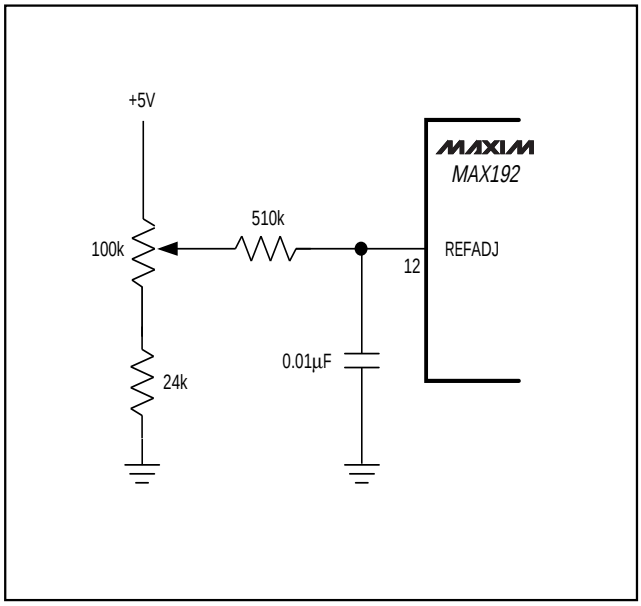

Figure 17. Reference-Adjust Circuit

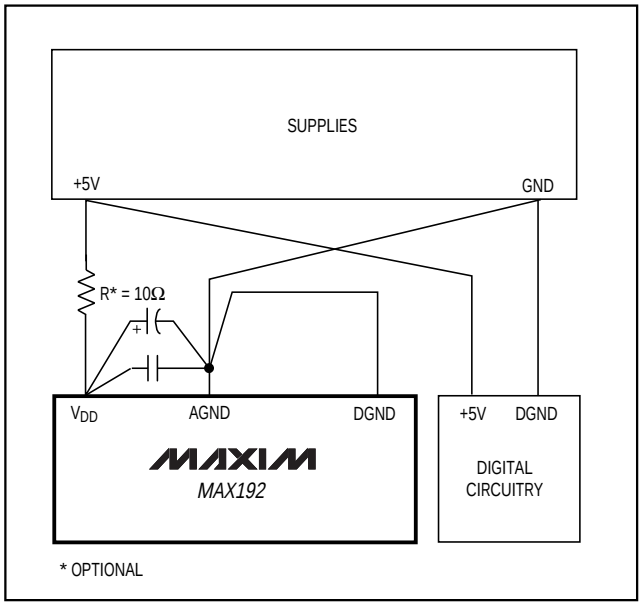

Figure 18. Power-Supply Grounding Connection

Layout, Grounding, Bypassing

For best performance, use printed circuit boards. Wire-wrap boards are not recommended. Board layout should ensure that digital and analog signal lines are separated from each other. Do not run analog and digital (especially clock) lines parallel to one another, or digital lines underneath the ADC package.

Figure 18 shows the recommended system ground connections. A single-point analog ground ("star" ground point) should be established at AGND, separate from the logic ground. All other analog grounds and DGND should be connected to this ground. No other digital system ground should be connected to this single-point analog ground. The ground return to the power supply for this ground should be low impedance and as short as possible for noise-free operation.

High-frequency noise in the V_{DD} power supply may affect the high-speed comparator in the ADC. Bypass these supplies to the single-point analog ground with 0.1µF and 4.7µF bypass capacitors close to the MAX192. Minimize capacitor lead lengths for best supply-noise rejection. If the +5V power supply is very noisy, a 10Ω resistor can be connected as a lowpass filter, as shown in Figure 18.

High-Speed Digital Interfacing

The MAX192 can interface with QSPI at high throughput rates using the circuit in Figure 19. This QSPI circuit can be programmed to do a conversion on each of the eight channels. The result is stored in memory without taxing the CPU since QSPI incorporates its own micro-sequencer.

Figure 20 details the code that sets up QSPI for autonomous operation. In external clock mode, the MAX192 performs a single-ended, unipolar conversion on each of the eight analog input channels. Figure 21 shows the timing associated with the assembly code of Figure 20. The first byte clocked into the MAX192 is the control byte, which triggers the first conversion on CH0. The last two bytes clocked into the MAX192 are all zero, and clock out the results of the CH7 conversion.

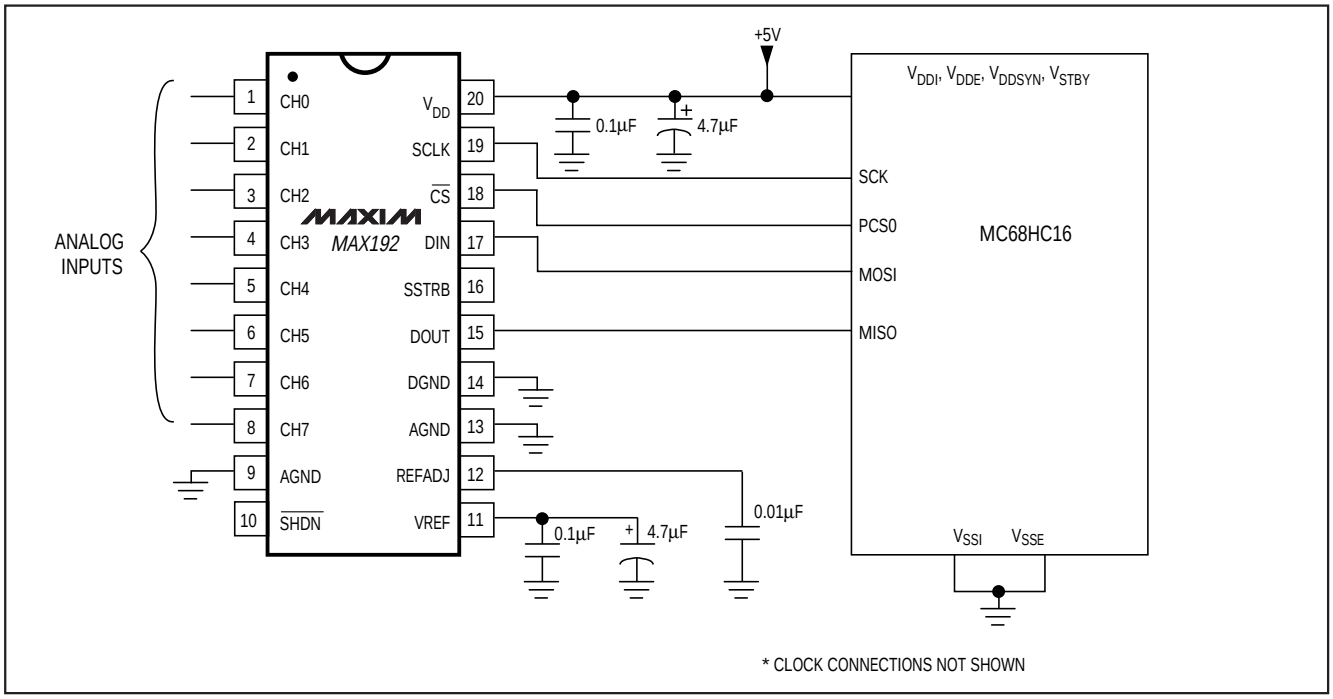

Figure 19. MAX192 QSPI Connection

TMS320 to MAX192 Interface

Figure 22 shows an application circuit to interface the MAX192 to the TMS320 in external clock mode. The timing diagram for this interface circuit is shown in Figure 23.

Use the following steps to initiate a conversion in the MAX192 and to read the results:

1) The TMS320 should be configured with CLKX (transmit clock) as an active-high output clock and CLKR (TMS320 receive clock) as an active-high input clock. CLKX and CLKR of the TMS320 are tied together with the SCLK input of the MAX192.

2) The MAX192 $\overline{CS}$ is driven low by the XF_ I/O port of the TMS320 to enable data to be clocked into DIN of the MAX192.

3) An 8-bit word (1XXXXX11) should be written to the MAX192 to initiate a conversion and place the device into external clock mode. Refer to Table 3 to select the proper XXXXX bit values for your specific application.

4) The SSTRB output of the MAX192 is monitored via the FSR input of the TMS320. A falling edge on the SSTRB output indicates that the conversion is in progress and data is ready to be received from the MAX192.

5) The TMS320 reads in one data bit on each of the next 16 rising edges of SCLK. These data bits represent the 10-bit conversion result and two sub-LSBs, followed by four trailing bits, which should be ignored.

6) Pull $\overline{CS}$ high to disable the MAX192 until the next conversion is initiated.

```
* Description :
*          This is a shell program for using a stand-alone 68HC16 without any external memory. The internal 1K RAM
*          is put into bank $0F to maintain 68HC11 code compatibility. This program was written with software
*          provided in the Motorola 68HC16 Evaluation Kit.
*
*  Roger J.A. Chen, Applications Engineer
*  MAXIM Integrated Products
*  November 20, 1992
*
*****************************************************************************************************************
      INCLUDE      'EQUATES.ASM'   ;Equates for common reg addrs
      INCLUDE      'ORG00000.ASM'  ;initialize reset vector
      INCLUDE      'ORG00008.ASM'  ;initialize interrupt vectors
      ORG    $0200                 ;start program after interrupt vectors
      INCLUDE  'INITSYS.ASM'       ;set EK=F,XK=0,YK=0,ZK=0
                                   ;set sys clock at 16.78 MHz, COP off
      INCLUDE  'INITRAM.ASM'       ;turn on internal SRAM at $10000
                                   ;set stack (SK=1, SP=03FE)
MAIN:
      JSR    INITQSPI
MAINLOOP:
      JSR    READ192
WAIT:
      LDAA   SPSR
      ANDA   #$80
      BEQ    WAIT                  ;wait for QSPI to finish
      BRA MAINLOOP
ENDPROGRAM:

INITQSPI:

;This routine sets up the QSPI microsequencer to operate on its own.
;The sequencer will read all eight channels of a MAX192 each time
;it is triggered. The A/D converter results will be left in the
;receive data RAM. Each 16 bit receive data RAM location will
;have a leading zero, 10 + 2 bits of conversion result and three zeros.
;
;Receive RAM Bits 15 14 13 12 11 10 09 08 07 06 05 04 03 02 01 00
;A/D Result          0   MSB                                LSB 0   0   0
*****  Initialize the QSPI Registers   ******
      PSHA
      PSHB
      LDAA   #%01111000
      STAA   QPDR              ;idle state for PCS0-3 = high
      LDAA   #%01111011
      STAA   QPAR              ;assign port D to be QSPI
      LDAA   #%01111110
      STAA   QDDR              ;only MISO is an input
      LDD    #$8008
      STD    SPCR0             ;master mode,16 bits/transfer,
                               ;CPOL=CPHA=0,1MHz Ser Clock
      LDD    #$0000
      STD    SPCR1             ;set delay between PCS0 and SCK,
                               ;set delay between transfers
```

Figure 20. MAX192 Assembly-Code Listing

```
      LDD     #$0800
      STD     SPCR2              ;set ENDQP to $8 for 9 transfers
*****  Initialize QSPI Command RAM  *****

      LDAA    #$80          ;CONT=1,BITSE=0,DT=0,DSCK=0,PCS0=ACTIVE
      STAA    $FD40          ;store first byte in COMMAND RAM
      LDAA    #$C0          ;CONT=1,BITSE=1,DT=0,DSCK=0,PCS0=ACTIVE
      STAA    $FD41
      STAA    $FD42
      STAA    $FD43
      STAA    $FD44
      STAA    $FD45
      STAA    $FD46
      STAA    $FD47
      LDAA    #$40          ;CONT=0,BITSE=1,DT=0,DSCK=0,PCS0=ACTIVE
      STAA    $FD48
*****  Initialize QSPI Transmit RAM *****

      LDD     #$008F
                                    STD     $FD20
      LDD     #$00CF
                                    STD     $FD22
      LDD     #$009F
                                    STD     $FD24
      LDD     #$00DF
                                    STD     $FD26
      LDD     #$00AF
                                    STD     $FD28
      LDD     #$00EF
                                    STD     $FD2A
      LDD     #$00BF
                                    STD     $FD2C
      LDD     #$00FF
                                    STD     $FD2E
      LDD     #$0000
                                    STD     $FD30
      PULB
      PULA
      RTS

READ192:
;This routine triggers the QSPI microsequencer to autonomously
;trigger conversions on all 8 channels of the MAX192. Each
;conversion result is stored in the receive data RAM.
      PSHA
      LDAA    #$80
      ORAA    SPCR1
      STAA    SPCR1          ;just set SPE
      PULA
      RTS

*****  Interrupts/Exceptions  *****

BDM: BGND              ;exception vectors point here
                       ;and put the user in background debug mode
```

Figure 20. MAX192 Assembly-Code Listing (continued)

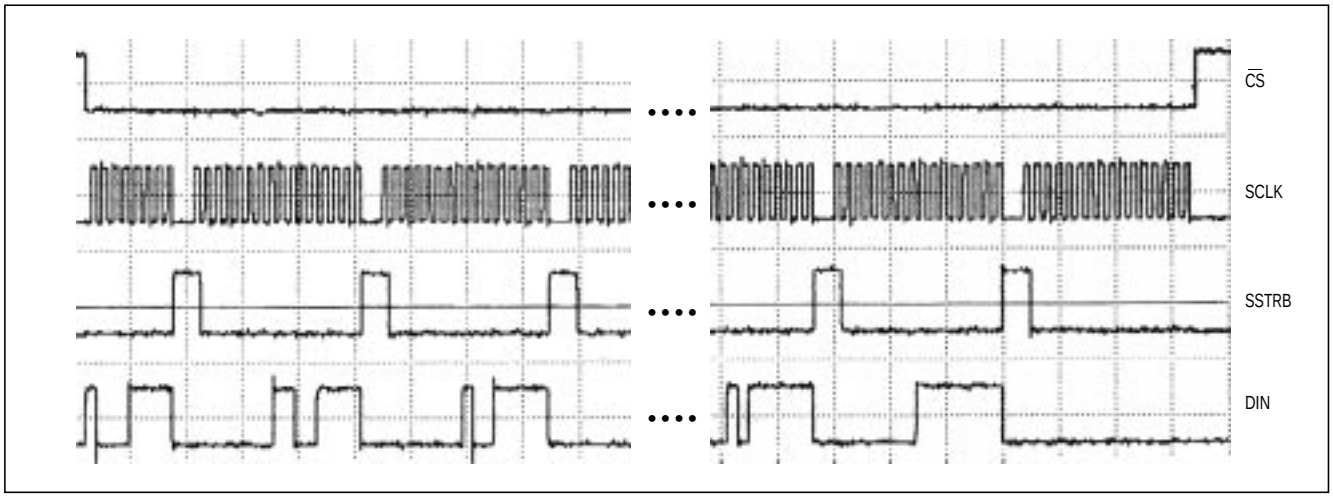

Figure 21. QSPI Assembly-Code Timing

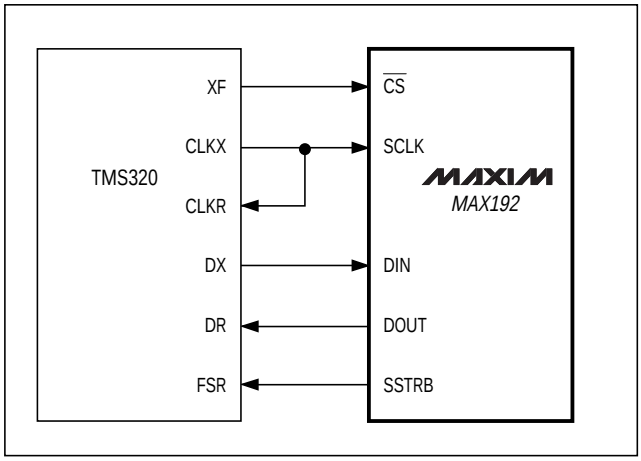

Figure 22. MAX192 to TMS320 Serial Interface

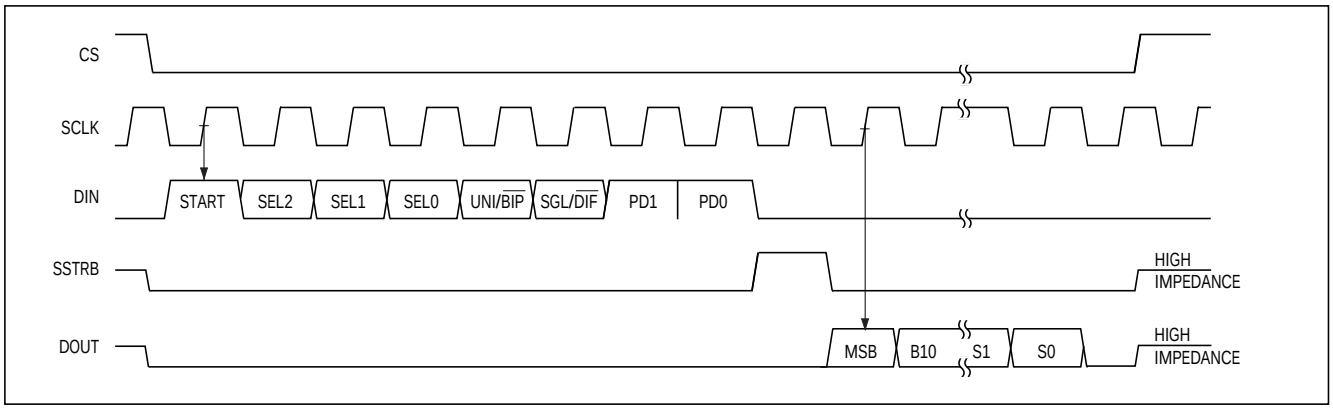

Figure 23. TMS320 Serial-Interface Timing Diagram

Low-Power, 8-Channel, Serial 10-Bit ADC

Typical Operating Circuit

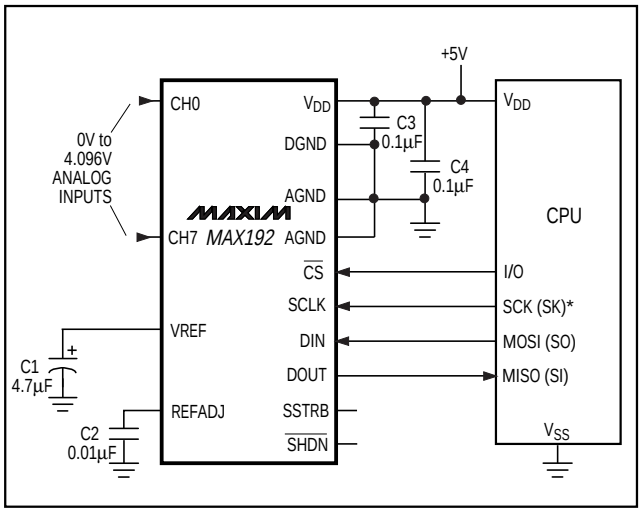

Chip Information

TRANSISTOR COUNT: 2278

Package Information

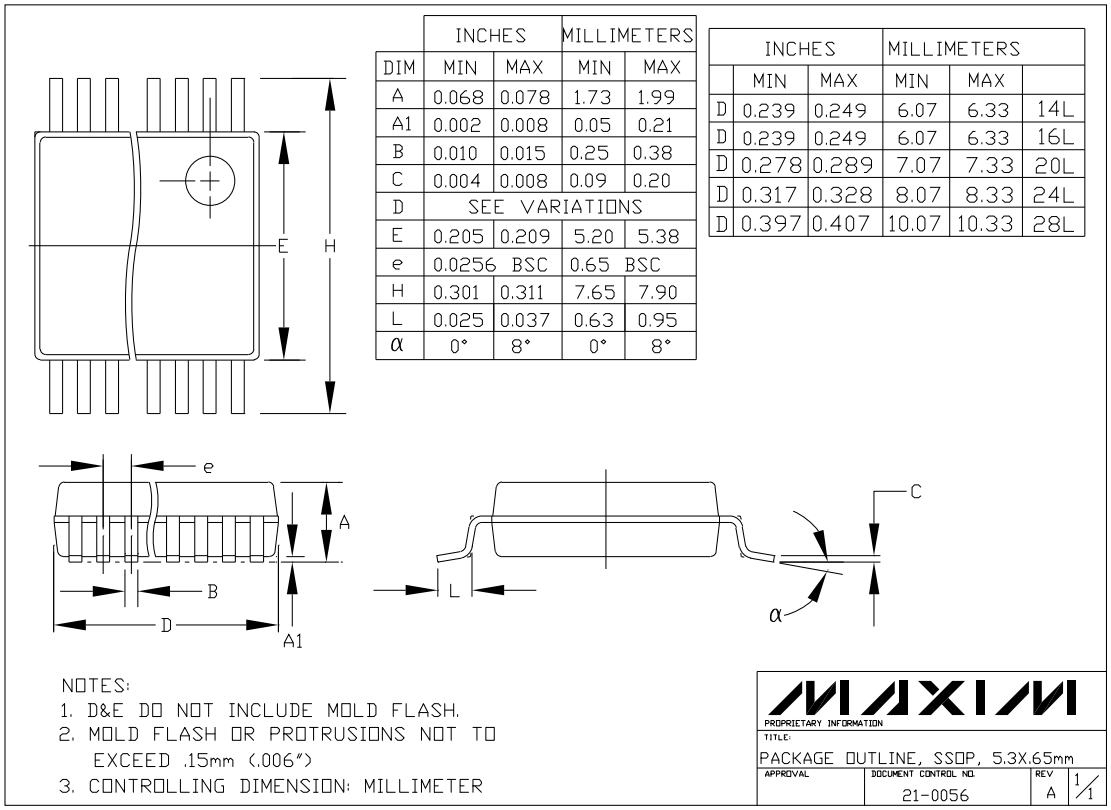

DIM	INCHES MIN	INCHES MAX	MILLIMETERS MIN	MILLIMETERS MAX
A	0.068	0.078	1.73	1.99
A1	0.002	0.008	0.05	0.21
B	0.010	0.015	0.25	0.38
C	0.004	0.008	0.09	0.20
D	SEE VARIATIONS			
E	0.205	0.209	5.20	5.38
e	0.0256 BSC		0.65 BSC	
H	0.301	0.311	7.65	7.90
L	0.025	0.037	0.63	0.95
α	0°	8°	0°	8°

	INCHES MIN	INCHES MAX	MILLIMETERS MIN	MILLIMETERS MAX	
D	0.239	0.249	6.07	6.33	14L
D	0.239	0.249	6.07	6.33	16L
D	0.278	0.289	7.07	7.33	20L
D	0.317	0.328	8.07	8.33	24L
D	0.397	0.407	10.07	10.33	28L

Maxim cannot assume responsibility for use of any circuitry other than circuitry entirely embodied in a Maxim product. No circuit patent licenses are implied. Maxim reserves the right to change the circuitry and specifications without notice at any time.

© 1997 Maxim Integrated Products Printed USA MAXIM is a registered trademark of Maxim Integrated Products.