LNK302/304-306
LinkSwitch™-TN Family

Lowest Component Count, Energy-Efficient
Off-Line Switcher IC

Product Highlights

Cost Effective Linear/Cap Dropper Replacement

- Lowest cost and component count buck converter solution
- Fully integrated auto-restart for short-circuit and open loop fault protection – saves external component costs
- LNK302 uses a simplified controller without auto-restart for very low system cost
- 66 kHz operation with accurate current limit – allows low cost off-the-shelf 1 mH inductor for up to 120 mA output current
- Tight tolerances and negligible temperature variation
- High breakdown voltage of 700 V provides excellent input surge withstand
- Frequency jittering dramatically reduces EMI (~10 dB)
  - Minimizes EMI filter cost
- High thermal shutdown temperature (+135 °C minimum)

Much Higher Performance Over Discrete Buck and Passive Solutions

- Supports buck, buck-boost and flyback topologies
- System level thermal overload, output short-circuit and open control loop protection
- Excellent line and load regulation even with typical configuration
- High bandwidth provides fast turn-on with no overshoot
- Current limit operation rejects line ripple
- Universal input voltage range (85 VAC to 265 VAC)
- Built-in current limit and hysteretic thermal protection
- Higher efficiency than passive solutions
- Higher power factor than capacitor-fed solutions
- Entirely manufacturable in SMD

EcoSmart™– Extremely Energy Efficient

- Consumes typically only 50/80 mW in self-powered buck topology at 115/230 VAC input with no-load (opto feedback)
- Consumes typically only 7/12 mW in flyback topology with external bias at 115/230 VAC input with no-load
- Meets California Energy Commission (CEC), Energy Star, and EU requirements

Applications

- Appliances and timers
- LED drivers and industrial controls

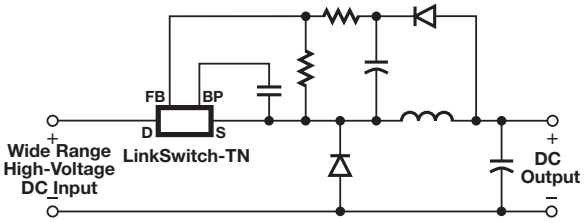

PI-3492-041509

Figure 1. Typical Buck Converter Application (See Application Examples Section for Other Circuit Configurations).

Output Current Table[1]

Product[4]	230 VAC ±15%		85-265 VAC	
	MDCM[2]	CCM[3]	MDCM[2]	CCM[3]
LNK302P/G/D	63 mA	80 mA	63 mA	80 mA
LNK304P/G/D	120 mA	170 mA	120 mA	170 mA
LNK305P/G/D	175 mA	280 mA	175 mA	280 mA
LNK306P/G/D	225 mA	360 mA	225 mA	360 mA

Table 1. Output Current Table.

Notes:
1. Typical output current in a non-isolated buck converter. Output power capability depends on respective output voltage. See Key Applications Considerations Section for complete description of assumptions, including fully discontinuous conduction mode (DCM) operation.
2. Mostly discontinuous conduction mode.
3. Continuous conduction mode.
4. Packages: P: DIP-8B, G: SMD-8B, D: SO-8C.

Description

LinkSwitch-TN is specifically designed to replace all linear and capacitor-fed (cap dropper) non-isolated power supplies in the under 360 mA output current range at equal system cost while offering much higher performance and energy efficiency. LinkSwitch-TN devices integrate a 700 V power MOSFET, oscillator, simple On/Off control scheme, a high-voltage switched current source, frequency jittering, cycle-by-cycle current limit and thermal shutdown circuitry onto a monolithic IC. The start-up and operating power are derived directly from the voltage on the DRAIN pin, eliminating the need for a bias supply and associated circuitry in buck or flyback converters. The fully integrated auto-restart circuit in the LNK304-306 safely limits output power during fault conditions such as short-circuit or open loop, reducing component count and system-level load protection cost. A local supply provided by the IC allows use of a non-safety graded optocoupler acting as a level shifter to further enhance line and load regulation performance in buck and buck-boost converters, if required.

This Product is Covered by Patents and/or Pending Patent Applications.

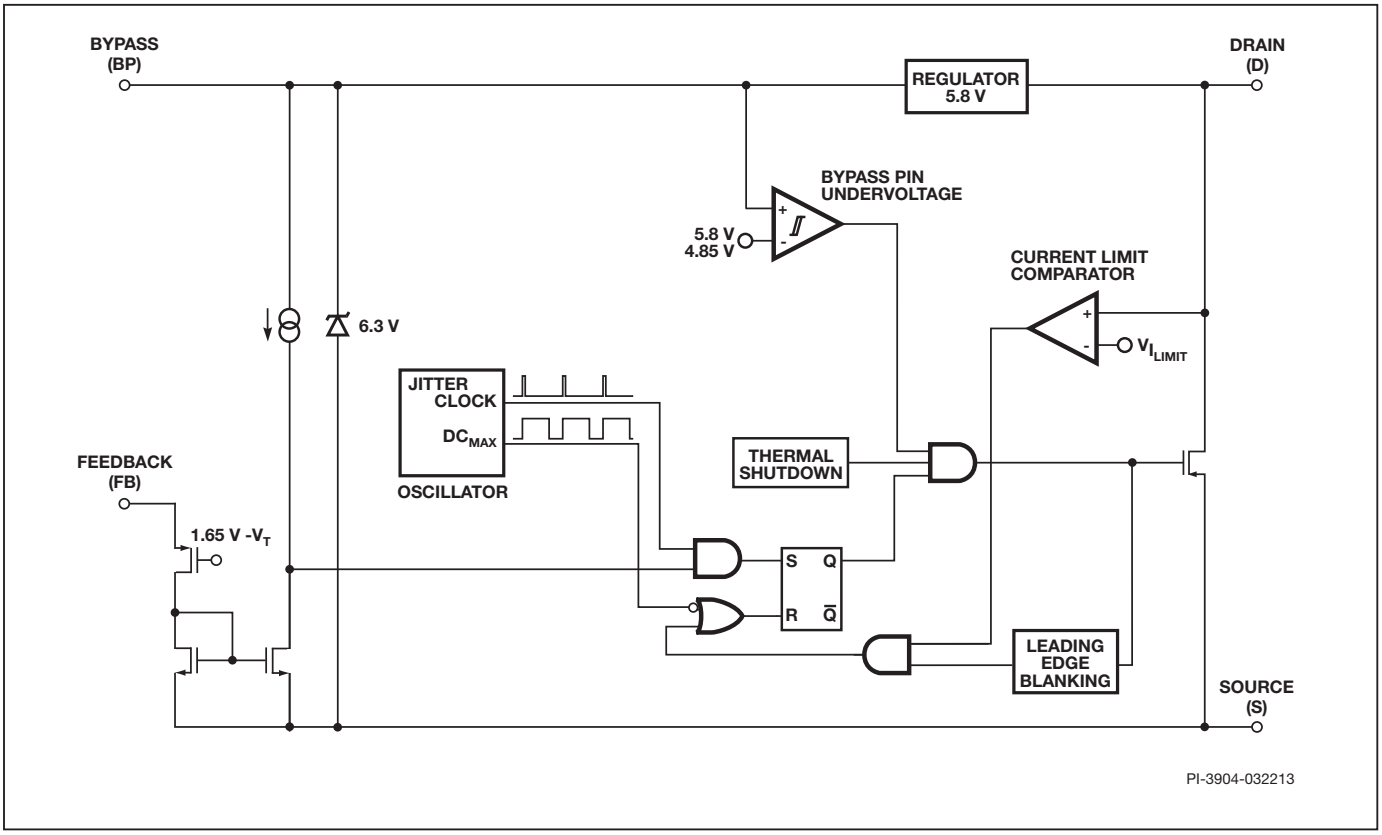

Figure 2a. Functional Block Diagram (LNK302).

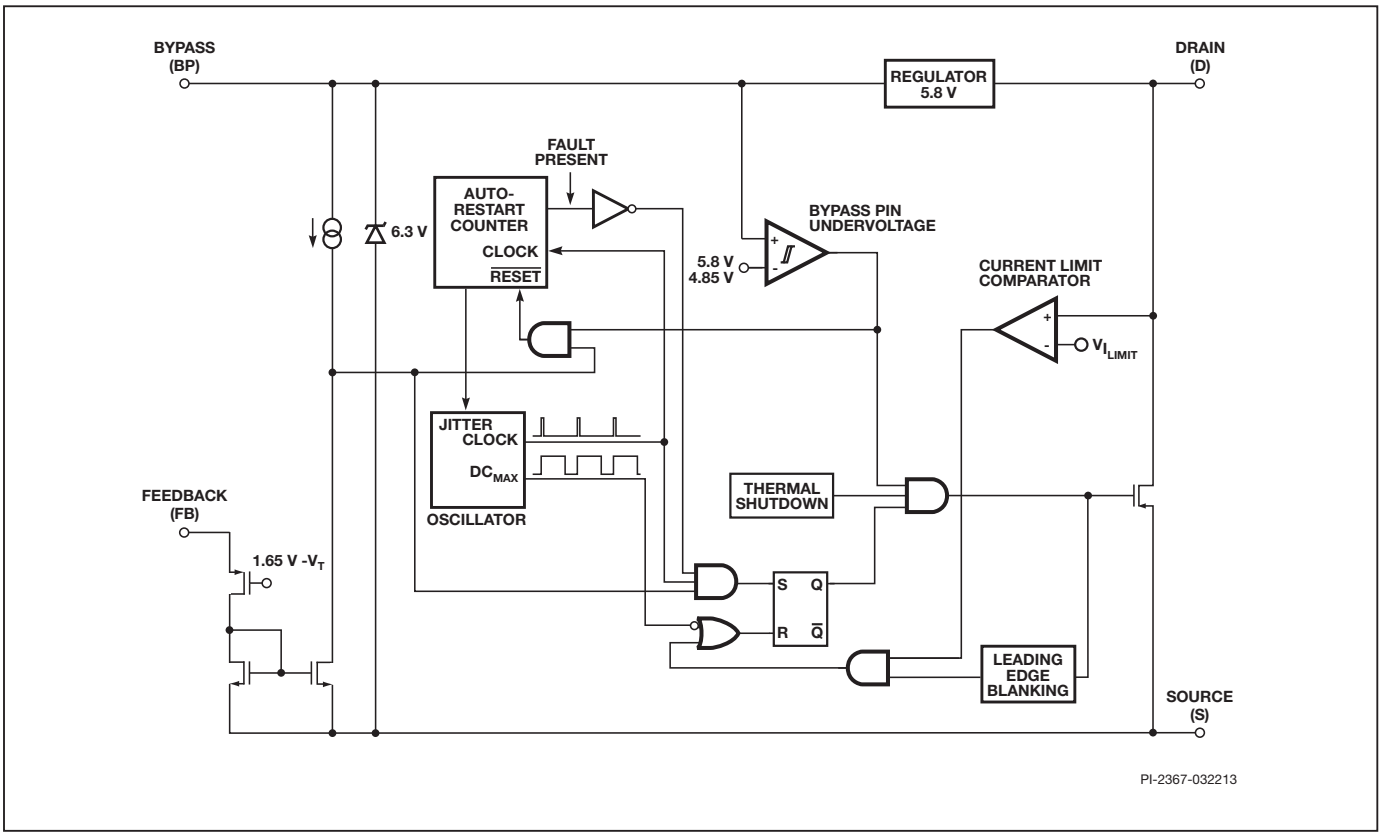

Figure 2b. Functional Block Diagram (LNK304-306).

Pin Functional Description

DRAIN (D) Pin:
Power MOSFET drain connection. Provides internal operating current for both start-up and steady-state operation.

BYPASS (BP) Pin:
Connection point for a 0.1 μF external bypass capacitor for the internally generated 5.8 V supply.

FEEDBACK (FB) Pin:
During normal operation, switching of the power MOSFET is controlled by this pin. MOSFET switching is terminated when a current greater than 49 μA is delivered into this pin.

SOURCE (S) Pin:
This pin is the power MOSFET source connection. It is also the ground reference for the BYPASS and FEEDBACK pins.

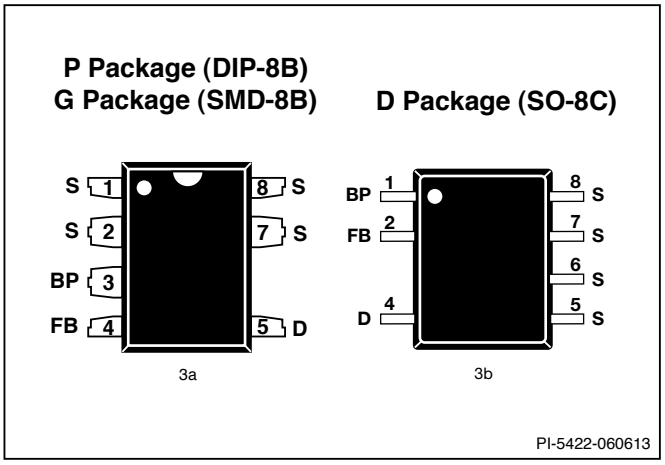

Figure 3. Pin Configuration.

LinkSwitch-TN Functional Description

LinkSwitch-TN combines a high-voltage power MOSFET switch with a power supply controller in one device. Unlike conventional PWM (pulse width modulator) controllers, LinkSwitch-TN uses a simple ON/OFF control to regulate the output voltage. The LinkSwitch-TN controller consists of an oscillator, feedback (sense and logic) circuit, 5.8 V regulator, BYPASS pin undervoltage circuit, over-temperature protection, frequency jittering, current limit circuit, leading edge blanking and a 700 V power MOSFET. The LinkSwitch-TN incorporates additional circuitry for auto-restart.

Oscillator

The typical oscillator frequency is internally set to an average of 66 kHz. Two signals are generated from the oscillator: the maximum duty cycle signal (DC_{MAX}) and the clock signal that indicates the beginning of each cycle.

The LinkSwitch-TN oscillator incorporates circuitry that introduces a small amount of frequency jitter, typically 4 kHz peak-to-peak, to minimize EMI emission. The modulation rate of the frequency jitter is set to 1 kHz to optimize EMI reduction for both average and quasi-peak emissions. The frequency jitter should be measured with the oscilloscope triggered at the falling edge of the DRAIN waveform. The waveform in Figure 4 illustrates the frequency jitter of the LinkSwitch-TN.

Feedback Input Circuit

The feedback input circuit at the FEEDBACK pin consists of a low impedance source follower output set at 1.65 V. When the current delivered into this pin exceeds 49 μA, a low logic level (disable) is generated at the output of the feedback circuit. This output is sampled at the beginning of each cycle on the rising edge of the clock signal. If high, the power MOSFET is turned on for that cycle (enabled), otherwise the power MOSFET remains off (disabled). Since the sampling is done only at the beginning of each cycle, subsequent changes in the FEEDBACK pin voltage or current during the remainder of the cycle are ignored.

5.8 V Regulator and 6.3 V Shunt Voltage Clamp

The 5.8 V regulator charges the bypass capacitor connected to the BYPASS pin to 5.8 V by drawing a current from the voltage on the DRAIN, whenever the MOSFET is off. The BYPASS pin is the internal supply voltage node for the LinkSwitch-TN. When the MOSFET is on, the LinkSwitch-TN runs off of the energy stored in the bypass capacitor. Extremely low power consumption of the internal circuitry allows the LinkSwitch-TN to operate continuously from the current drawn from the DRAIN pin. A bypass capacitor value of 0.1 μF is sufficient for both high frequency decoupling and energy storage.

In addition, there is a 6.3 V shunt regulator clamping the BYPASS pin at 6.3 V when current is provided to the BYPASS pin through an external resistor. This facilitates powering of LinkSwitch-TN externally through a bias winding to decrease the no-load consumption to about 50 mW.

BYPASS Pin Undervoltage

The BYPASS pin undervoltage circuitry disables the power MOSFET when the BYPASS pin voltage drops below 4.85 V. Once the BYPASS pin voltage drops below 4.85 V, it must rise back to 5.8 V to enable (turn-on) the power MOSFET.

Over-Temperature Protection

The thermal shutdown circuitry senses the die temperature. The threshold is set at 142 °C typical with a 75 °C hysteresis. When the die temperature rises above this threshold (142 °C) the power MOSFET is disabled and remains disabled until the die temperature falls by 75 °C, at which point it is re-enabled.

Current Limit

The current limit circuit senses the current in the power MOSFET. When this current exceeds the internal threshold (I_{LIMIT}), the power MOSFET is turned off for the remainder of that cycle. The leading edge blanking circuit inhibits the current limit comparator for a short time (t_{LEB}) after the power MOSFET is turned on. This leading edge blanking time has been set so that current spikes caused by capacitance and rectifier reverse recovery time will not cause premature termination of the switching pulse.

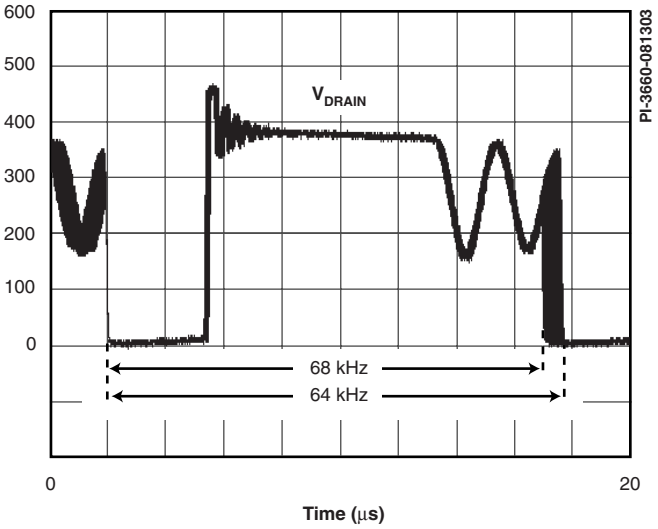

Figure 4. Frequency Jitter.

Auto-Restart (LNK304-306 Only)

In the event of a fault condition such as output overload, output short, or an open-loop condition, LinkSwitch-TN enters into auto-restart operation. An internal counter clocked by the oscillator gets reset every time the FEEDBACK pin is pulled high. If the FEEDBACK pin is not pulled high for 50 ms, the power MOSFET switching is disabled for 800 ms. The auto-restart alternately enables and disables the switching of the power MOSFET until the fault condition is removed.

Applications Example

A 1.44 W Universal Input Buck Converter

The circuit shown in Figure 5 is a typical implementation of a 12 V, 120 mA non-isolated power supply used in appliance control such as rice cookers, dishwashers or other white goods. This circuit may also be applicable to other applications such as night-lights, LED drivers, electricity meters, and residential heating controllers, where a non-isolated supply is acceptable.

The input stage comprises fusible resistor RF1, diodes D3 and D4, capacitors C4 and C5, and inductor L2. Resistor RF1 is a flame proof, fusible, wire wound resistor. It accomplishes several functions: a) Inrush current limitation to safe levels for rectifiers D3 and D4; b) Differential mode noise attenuation; c) Input fuse should any other component fail short-circuit (component fails safely open-circuit without emitting smoke, fire or incandescent material).

The power processing stage is formed by the LinkSwitch-TN, freewheeling diode D1, output choke L1, and the output capacitor C2. The LNK304 was selected such that the power supply operates in the mostly discontinuous-mode (MDCM). Diode D1 is an ultrafast diode with a reverse recovery time (t_{RR}) of approximately 75 ns, acceptable for MDCM operation. For continuous conduction mode (CCM) designs, a diode with a t_{rr} of ≤35 ns is recommended. Inductor L1 is a standard off-the-shelf inductor with appropriate RMS current rating (and acceptable temperature rise). Capacitor C2 is the output filter capacitor; its primary function is to limit the output voltage ripple. The output voltage ripple is a stronger function of the ESR of the output capacitor than the value of the capacitor itself.

To a first order, the forward voltage drops of D1 and D2 are identical. Therefore, the voltage across C3 tracks the output voltage. The voltage developed across C3 is sensed and regulated via the resistor divider R1 and R3 connected to U1's FEEDBACK pin. The values of R1 and R3 are selected such that, at the desired output voltage, the voltage at the FEEDBACK pin is 1.65 V.

Regulation is maintained by skipping switching cycles. As the output voltage rises, the current into the FEEDBACK pin will rise. If this exceeds I_{FB} then subsequent cycles will be skipped until the current reduces below I_{FB}. Thus, as the output load is reduced, more cycles will be skipped and if the load increases, fewer cycles are skipped. To provide overload protection if no cycles are skipped during a 50 ms period, LinkSwitch-TN will enter auto-restart (LNK304-306), limiting the average output power to approximately 6% of the maximum overload power. Due to tracking errors between the output voltage and the voltage across C3 at light load or no-load, a small pre-load may be required (R4). For the design in Figure 5, if regulation to zero load is required, then this value should be reduced to 2.4 kΩ.

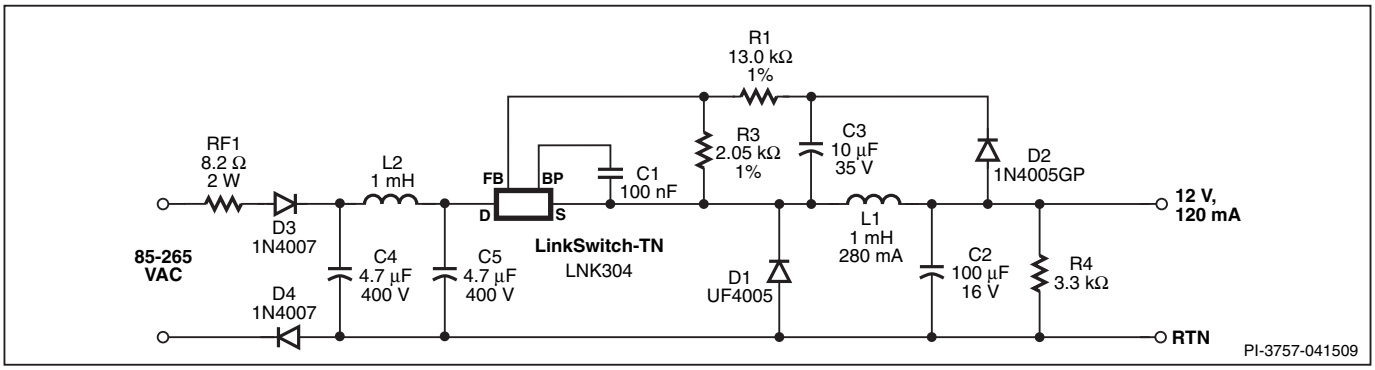

Figure 5. Universal Input, 12 V, 120 mA Constant Voltage Power Supply Using LinkSwitch-TN.

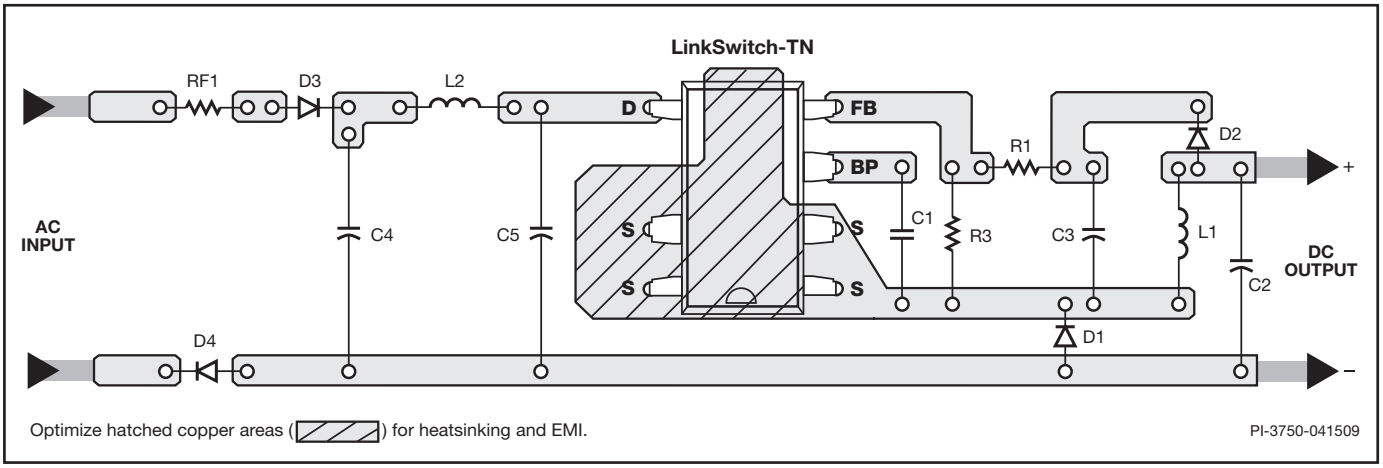

Figure 6a. Recommended Printed Circuit Layout for LinkSwitch-TN in a Buck Converter Configuration using P or G Package.

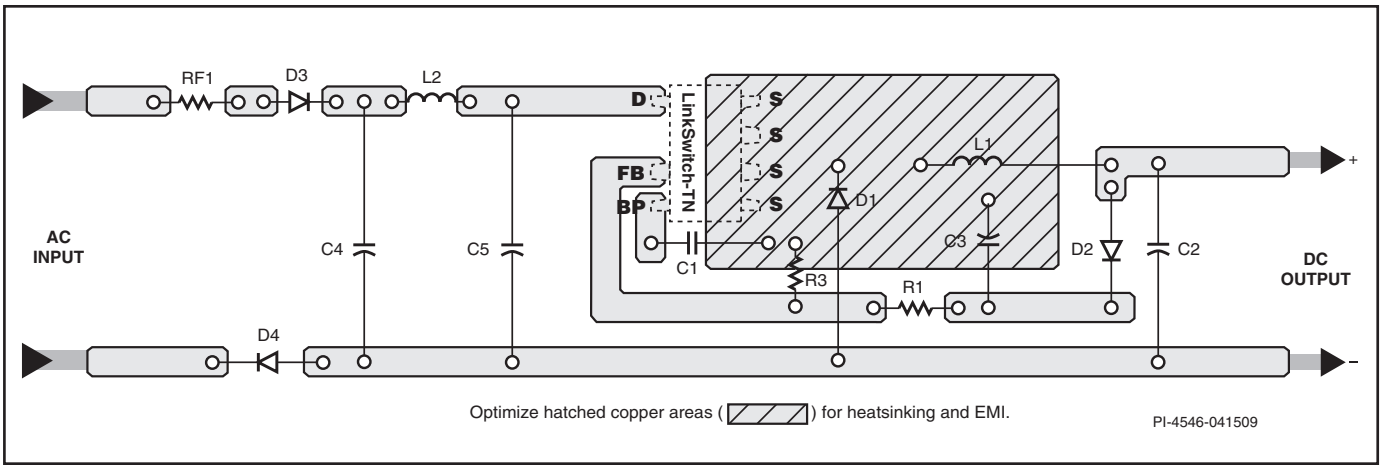

Figure 6b. Recommended Printed Circuit Layout for LinkSwitch-TN in a Buck Converter Configuration using D Package to Bottom Side of the Board.

Key Application Considerations

LinkSwitch-TN Design Considerations

Output Current Table

Data sheet maximum output current table (Table 1) represents the maximum practical continuous output current for both mostly discontinuous conduction mode (MDCM) and continuous conduction mode (CCM) of operation that can be delivered from a given LinkSwitch-TN device under the following assumed conditions:

1. Buck converter topology.
2. The minimum DC input voltage is ≥70 V. The value of input capacitance should be large enough to meet this criterion.
3. For CCM operation a KRP* of 0.4.
4. Output voltage of 12 VDC.
5. Efficiency of 75%.
6. A catch/freewheeling diode with t_{RR} ≤75 ns is used for MDCM operation and for CCM operation, a diode with t_{RR} ≤35 ns is used.
7. The part is board mounted with SOURCE pins soldered to a sufficient area of copper to keep the SOURCE pin temperature at or below 100 °C.

*KRP is the ratio of ripple to peak inductor current.

LinkSwitch-TN Selection and Selection Between MDCM and CCM Operation

Select the LinkSwitch-TN device, freewheeling diode and output inductor that gives the lowest overall cost. In general, MDCM provides the lowest cost and highest efficiency converter. CCM designs require a larger inductor and ultrafast (t_{RR} ≤35 ns) freewheeling diode in all cases. It is lower cost to use a larger LinkSwitch-TN in MDCM than a smaller LinkSwitch-TN in CCM because of the additional external component costs of a CCM design. However, if the highest output current is required, CCM should be employed following the guidelines below.

Topology Options

LinkSwitch-TN can be used in all common topologies, with or without an optocoupler and reference to improve output voltage tolerance and regulation. Table 2 provide a summary of these configurations. For more information see the Application Note – LinkSwitch-TN Design Guide.

Topology	Basic Circuit Schematic	Key Features
High-Side Buck – Direct Feedback	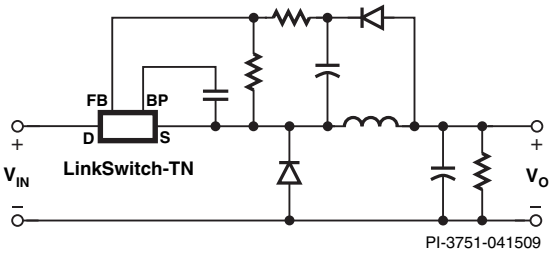	1. Output referenced to input 2. Positive output (V_O) with respect to -V_{IN} 3. Step down – $V_O < V_{IN}$ 4. Low cost direct feedback (±10% typ.) 5. Requires an output load to maintain regulation
High-Side Buck – Optocoupler Feedback	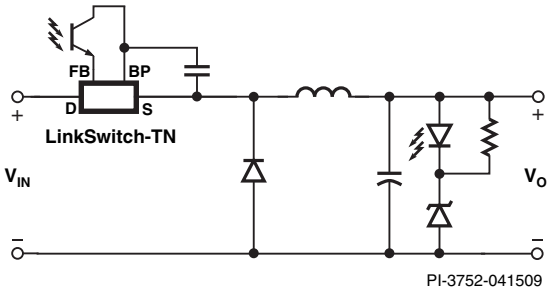	1. Output referenced to input 2. Positive output (V_O) with respect to -V_{IN} 3. Step down – $V_O < V_{IN}$ 4. Optocoupler feedback - Accuracy only limited by reference choice - Low cost non-safety rated optocoupler - No pre-load required 5. Minimum no-load consumption
Low-Side Buck – Optocoupler Feedback	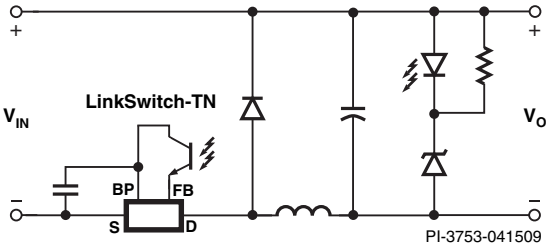	1. Output referenced to input 2. Negative output (V_O) with respect to +V_{IN} 3. Step down – $V_O < V_{IN}$ 4. Optocoupler feedback - Accuracy only limited by reference choice - Low cost non-safety rated optocoupler - No pre-load required - Ideal for driving LEDs
Low-Side Buck – Constant Current LED Driver	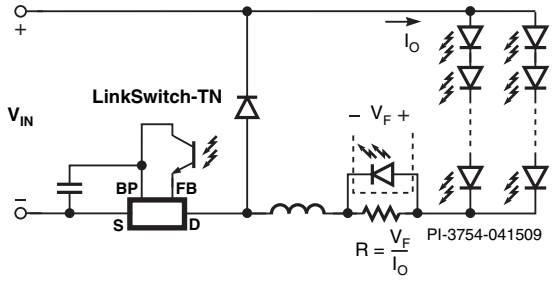	
High-Side Buck-Boost – Direct Feedback	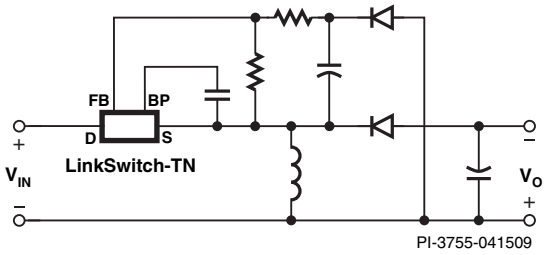	1. Output referenced to input 2. Negative output (V_O) with respect to +V_{IN} 3. Step up/down – $V_O > V_{IN}$ or $V_O < V_{IN}$ 4. Low cost direct feedback (±10% typ.) 5. Fail-safe – output is not subjected to input voltage if the internal power MOSFET fails 6. Ideal for driving LEDs – better accuracy and temperature stability than Low-side Buck constant current LED driver 7. Requires an output load to maintain regulation
High-Side Buck-Boost – Constant Current LED Driver	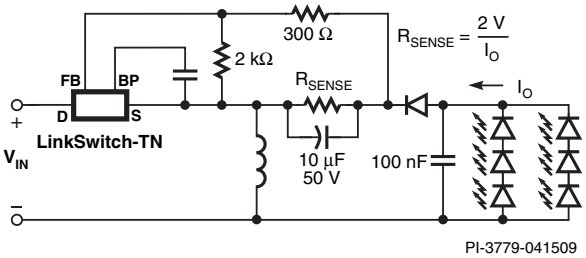	

Table 2. Common Circuit Configurations Using LinkSwitch-TN. (continued on next page)

Topology	Basic Circuit Schematic	Key Features
Low-Side Buck-Boost – Optocoupler Feedback	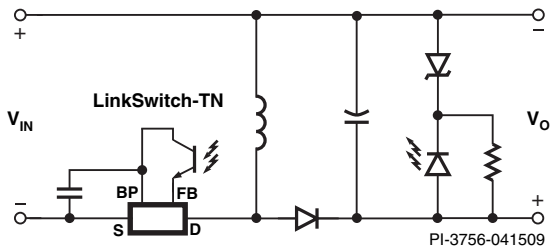	1. Output referenced to input 2. Positive output (V_O) with respect to $+V_{IN}$ 3. Step up/down – $V_O > V_{IN}$ or $V_O < V_{IN}$ 4. Optocoupler feedback - Accuracy only limited by reference choice - Low cost non-safety rated optocoupler - No pre-load required 5. Fail-safe – output is not subjected to input voltage if the internal power MOSFET fails 6. Minimum no-load consumption

Table 2 (cont). Common Circuit Configurations Using LinkSwitch-TN.

Component Selection

Referring to Figure 5, the following considerations may be helpful in selecting components for a LinkSwitch-TN design.

Freewheeling Diode D1

Diode D1 should be an ultrafast type. For MDCM, reverse recovery time t_{RR} ≤75 ns should be used at a temperature of 70 °C or below. Slower diodes are not acceptable, as continuous mode operation will always occur during startup, causing high leading edge current spikes, terminating the switching cycle prematurely, and preventing the output from reaching regulation. If the ambient temperature is above 70 °C then a diode with t_{RR} ≤35 ns should be used.

For CCM an ultrafast diode with reverse recovery time t_{RR} ≤35 ns should be used. A slower diode may cause excessive leading edge current spikes, terminating the switching cycle prematurely and preventing full power delivery.

Fast and slow diodes should never be used as the large reverse recovery currents can cause excessive power dissipation in the diode and/or exceed the maximum drain current specification of LinkSwitch-TN.

Feedback Diode D2

Diode D2 can be a low-cost slow diode such as the 1N400X series, however it should be specified as a glass passivated type to guarantee a specified reverse recovery time. To a first order, the forward drops of D1 and D2 should match.

Inductor L1

Choose any standard off-the-shelf inductor that meets the design requirements. A “drum” or “dog bone” “I” core inductor is recommended with a single ferrite element due to its low cost and very low audible noise properties. The typical inductance value and RMS current rating can be obtained from the LinkSwitch-TN design spreadsheet available within the PI Expert design suite from Power Integrations. Choose L1 greater than or equal to the typical calculated inductance with RMS current rating greater than or equal to calculated RMS inductor current.

Capacitor C2

The primary function of capacitor C2 is to smooth the inductor current. The actual output ripple voltage is a function of this capacitor’s ESR. To a first order, the ESR of this capacitor should not exceed the rated ripple voltage divided by the typical current limit of the chosen LinkSwitch-TN.

Feedback Resistors R1 and R3

The values of the resistors in the resistor divider formed by R1 and R3 are selected to maintain 1.65 V at the FEEDBACK pin. It is recommended that R3 be chosen as a standard 1% resistor of 2 kΩ. This ensures good noise immunity by biasing the feedback network with a current of approximately 0.8 mA.

Feedback Capacitor C3

Capacitor C3 can be a low cost general purpose capacitor. It provides a “sample and hold” function, charging to the output voltage during the off time of LinkSwitch-TN. Its value should be 10 μF to 22 μF; smaller values cause poorer regulation at light load conditions.

Pre-Load Resistor R4

In high-side, direct feedback designs where the minimum load is <3 mA, a pre-load resistor is required to maintain output regulation. This ensures sufficient inductor energy to pull the inductor side of the feedback capacitor C3 to input return via D2. The value of R4 should be selected to give a minimum output load of 3 mA.

In designs with an optocoupler the Zener or reference bias current provides a 1 mA to 2 mA minimum load, preventing “pulse bunching” and increased output ripple at zero load.

LinkSwitch-TN Layout Considerations

In the buck or buck-boost converter configuration, since the SOURCE pins in LinkSwitch-TN are switching nodes, the copper area connected to SOURCE should be minimized to minimize EMI within the thermal constraints of the design.

In the boost configuration, since the SOURCE pins are tied to DC return, the copper area connected to SOURCE can be maximized to improve heat sinking.

The loop formed between the LinkSwitch-TN, inductor (L1), freewheeling diode (D1), and output capacitor (C2) should be kept as small as possible. The BYPASS pin capacitor C1 (Figure 6) should be located physically close to the SOURCE (S) and BYPASS (BP) pins. To minimize direct coupling from switching nodes, the LinkSwitch-TN should be placed away

from AC input lines. It may be advantageous to place capacitors C4 and C5 in-between LinkSwitch-TN and the AC input. The second rectifier diode D4 is optional, but may be included for better EMI performance and higher line surge withstand capability.

Quick Design Checklist

As with any power supply design, all LinkSwitch-TN designs should be verified for proper functionality on the bench. The following minimum tests are recommended:

1. Adequate DC rail voltage – check that the minimum DC input voltage does not fall below 70 VDC at maximum load, minimum input voltage.
2. Correct Diode Selection – UF400x series diodes are recommended only for designs that operate in MDCM at an ambient of 70 °C or below. For designs operating in continuous conduction mode (CCM) and/or higher ambients, then a diode with a reverse recovery time of 35 ns or better, such as the BYV26C, is recommended.
3. Maximum drain current – verify that the peak drain current is below the data sheet peak drain specification under worst-case conditions of highest line voltage, maximum overload (just prior to auto-restart) and highest ambient temperature.
4. Thermal check – at maximum output power, minimum input voltage and maximum ambient temperature, verify that the LinkSwitch-TN SOURCE pin temperature is 100 °C or below. This figure ensures adequate margin due to variations in $R_{DS(ON)}$ from part to part. A battery powered thermocouple meter is recommended to make measurements when the SOURCE pins are a switching node. Alternatively, the ambient temperature may be raised to indicate margin to thermal shutdown.

In a LinkSwitch-TN design using a buck or buck-boost converter topology, the SOURCE pin is a switching node. Oscilloscope measurements should therefore be made with probe grounded to a DC voltage, such as primary return or DC input rail, and not to the SOURCE pins. The power supply input must always be supplied from an isolated source (e.g. via an isolation transformer).

Absolute Maximum Ratings[1,5]

DRAIN Pin Voltage ..... -0.3 V to 700 V
DRAIN Pin Peak Current: LNK302 ..... 200 (375) mA[2]
LNK304 ..... 400 (750) mA[2]
LNK305 ..... 800 (1500) mA[2]
LNK306 ..... 1400 (2600) mA[2]
FEEDBACK Pin Voltage ..... -0.3 V to 9 V
FEEDBACK Pin Current ..... 100 mA
BYPASS Pin Voltage ..... -0.3 V to 9 V
Storage Temperature ..... -65 °C to 150 °C
Operating Junction Temperature[3] ..... -40 °C to 150 °C
Lead Temperature[4] ..... 260 °C

Notes:
1. All voltages referenced to SOURCE, T_A = 25 °C.
2. The higher peak DRAIN current is allowed if the DRAIN to SOURCE voltage does not exceed 400 V.
3. Normally limited by internal circuitry.
4. 1/16 in. from case for 5 seconds.
5. Maximum ratings specified may be applied, one at a time, without causing permanent damage to the product. Exposure to Absolute Maximum Rating conditions for extended periods of time may affect product reliability.

Thermal Resistance

Thermal Resistance: P or G Package:
(θ_{JA}) ..... 70 °C/W[3]; 60 °C/W[4]
(θ_{JC})[1] ..... 11 °C/W
D Package:
(θ_{JA}) ..... 100 °C/W[3]; 80 °C/W[4]
(θ_{JC})[2] ..... 30 °C/W

Notes:
1. Measured on pin 2 (SOURCE) close to plastic interface.
2. Measured on pin 8 (SOURCE) close to plastic interface.
3. Soldered to 0.36 sq. in. (232 mm^2), 2 oz. (610 g/m^2) copper clad.
4. Soldered to 1 sq. in. (645 mm^2), 2 oz. (610 g/m^2) copper clad.

Parameter	Symbol	Conditions SOURCE = 0 V; T_J = -40 to 125 °C See Figure 7 (Unless Otherwise Specified)		Min	Typ	Max	Units
Control Functions							
Output Frequency	f_{OSC}	T_J = 25 °C	Average	62	66	70	kHz
			Peak-Peak Jitter		4		
Maximum Duty Cycle	DC_{MAX}	S2 Open		66	69	72	%
FEEDBACK Pin Turnoff Threshold Current	I_{FB}	T_J = 25 °C		30	49	68	µA
FEEDBACK Pin Voltage at Turnoff Threshold	V_{FB}			1.54	1.65	1.76	V
DRAIN Pin Supply Current	I_{S1}	V_{FB} ≥2 V (MOSFET Not Switching) See Note A			160	220	µA
	I_{S2}	FEEDBACK Open (MOSFET Switching) See Notes A, B	LNK302/304		200	260	µA
			LNK305		220	280	
			LNK306		250	310	
BYPASS Pin Charge Current	I_{CH1}	V_{BP} = 0 V T_J = 25 °C	LNK302/304	-5.5	-3.3	-1.8	mA
			LNK305/306	-7.5	-4.6	-2.5	
	I_{CH2}	V_{BP} = 4 V T_J = 25 °C	LNK302/304	-3.8	-2.3	-1.0	
			LNK305/306	-4.5	-3.3	-1.5	

Parameter	Symbol	Conditions SOURCE = 0 V; T_J = -40 to 125 °C See Figure 7 (Unless Otherwise Specified)		Min	Typ	Max	Units
Control Functions (cont.)							
BYPASS Pin Voltage	V_{BP}			5.55	5.8	6.10	V
BYPASS Pin Voltage Hysteresis	V_{BPH}			0.8	0.95	1.2	V
BYPASS Pin Supply Current	I_{BPSC}	See Note D		68			µA
Circuit Protection							
Current Limit	I_{LIMIT} (See Note E)	di/dt = 55 mA/s T_J = 25 °C	LNK302	126	136	146	mA
		di/dt = 250 mA/s T_J = 25 °C		145	165	185	
		di/dt = 65 mA/s T_J = 25 °C	LNK304	240	257	275	
		di/dt = 415 mA/s T_J = 25 °C		271	308	345	
		di/dt = 75 mA/s T_J = 25 °C	LNK305	350	375	401	
		di/dt = 500 mA/s T_J = 25 °C		396	450	504	
		di/dt = 95 mA/s T_J = 25 °C	LNK306	450	482	515	
		di/dt = 610 mA/s T_J = 25 °C		508	578	647	
Minimum On Time	$t_{ON(MIN)}$		LNK302/304	280	360	475	ns
			LNK305	360	460	610	
			LNK306	400	500	675	
Leading Edge Blanking Time	t_{LEB}	T_J = 25 °C See Note F		170	215		ns
Thermal Shutdown Temperature	T_{SD}			135	142	150	°C
Thermal Shutdown Hysteresis	T_{SHD}	See Note G			75		°C

Parameter	Symbol	Conditions SOURCE = 0 V; T_J = -40 to 125 °C See Figure 7 (Unless Otherwise Specified)		Min	Typ	Max	Units
Output							
ON-State Resistance	$R_{DS(ON)}$	LNK302 I_D = 13 mA	T_J = 25 °C		48	55.2	Ω
			T_J = 100 °C		76	88.4	
		LNK304 I_D = 25 mA	T_J = 25 °C		24	27.6	
			T_J = 100 °C		38	44.2	
		LNK305 I_D = 35 mA	T_J = 25 °C		12	13.8	
			T_J = 100 °C		19	22.1	
		LNK306 I_D = 45 mA	T_J = 25 °C		7	8.1	
			T_J = 100 °C		11	12.9	
OFF-State Drain Leakage Current	I_{DSS}	V_{BP} = 6.2 V, V_{FB} ≥2 V, V_{DS} = 560 V, T_J = 25 °C	LNK302/304			50	μA
			LNK305			70	
			LNK306			90	
Breakdown Voltage	BV_{DSS}	V_{BP} = 6.2 V, V_{FB} ≥2 V, T_J = 25 °C		700			V
Rise Time	t_R	Measured in a Typical Buck Converter Application			50		ns
Fall Time	t_F				50		ns
DRAIN Pin Supply Voltage				50			V
Output Enable Delay	t_{EN}	See Figure 9				10	μs
Output Disable Setup Time	t_{DST}				0.5		μs
Auto-Restart ON-Time	t_{AR}	T_J = 25 °C See Note H	LNK302	Not Applicable			ms
			LNK304-306		50		
Auto-Restart Duty Cycle	DC_{AR}		LNK302	Not Applicable			%
			LNK304-306		6		

Notes:

A. Total current consumption is the sum of I_{S1} and I_{DSS} when FEEDBACK pin voltage is ≥2 V (MOSFET not switching) and the sum of I_{S2} and I_{DSS} when FEEDBACK pin is shorted to SOURCE (MOSFET switching).

B. Since the output MOSFET is switching, it is difficult to isolate the switching current from the supply current at the DRAIN. An alternative is to measure the BYPASS pin current at 6 V.

C. See Typical Performance Characteristics section Figure 14 for BYPASS pin start-up charging waveform.

D. This current is only intended to supply an optional optocoupler connected between the BYPASS and FEEDBACK pins and not any other external circuitry.

E. For current limit at other di/dt values, refer to Figure 13.

F. This parameter is guaranteed by design.

G. This parameter is derived from characterization.

H. Auto-restart on time has the same temperature characteristics as the oscillator (inversely proportional to frequency).

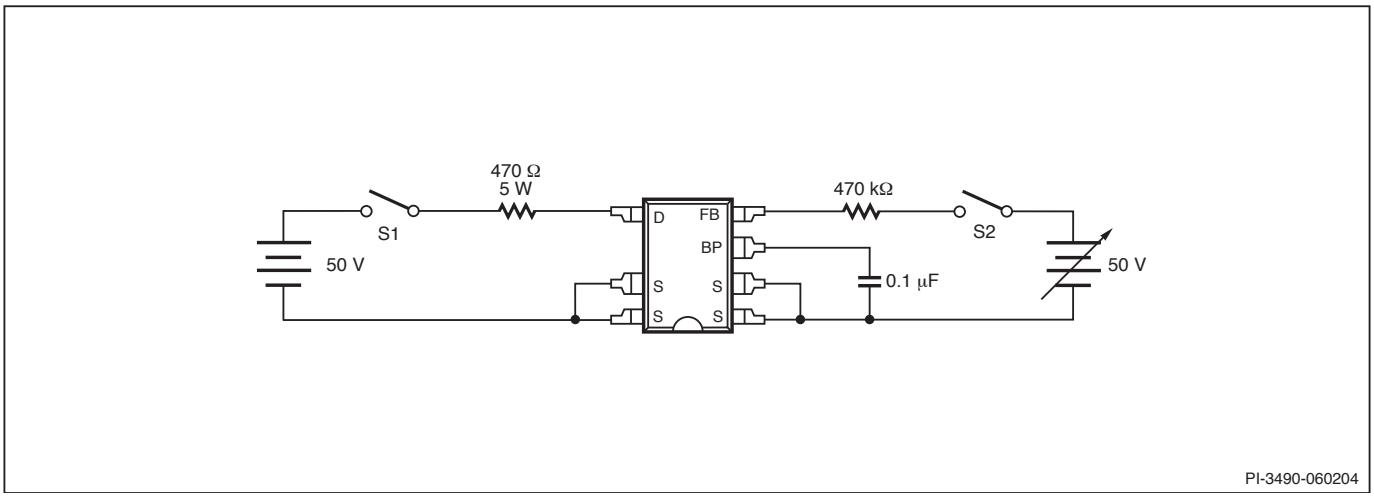

Figure 7. LinkSwitch-TN General Test Circuit.

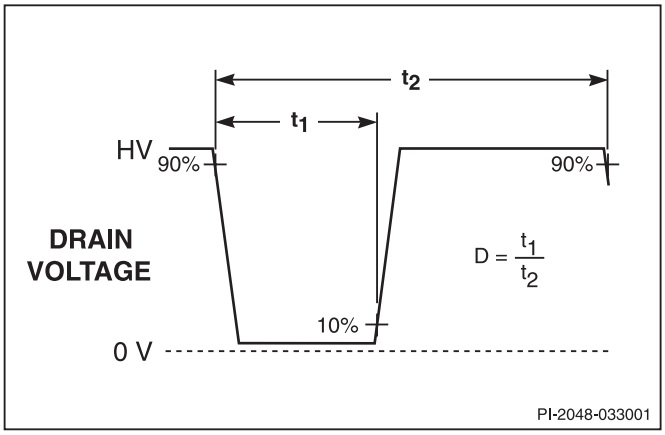

Figure 8. LinkSwitch-TN Duty Cycle Measurement.

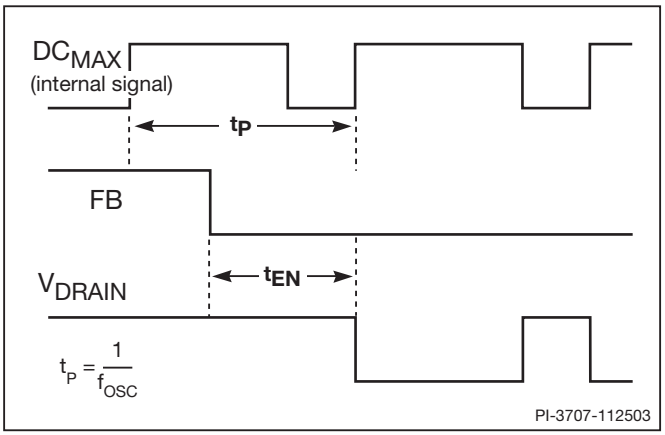

Figure 9. LinkSwitch-TN Output Enable Timing.

Typical Performance Characteristics

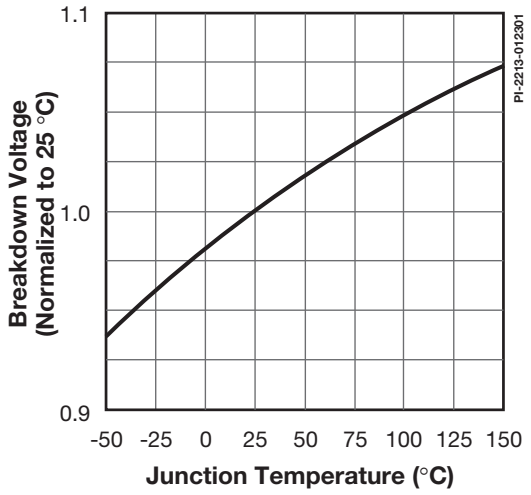

Figure 10. Breakdown vs. Temperature.

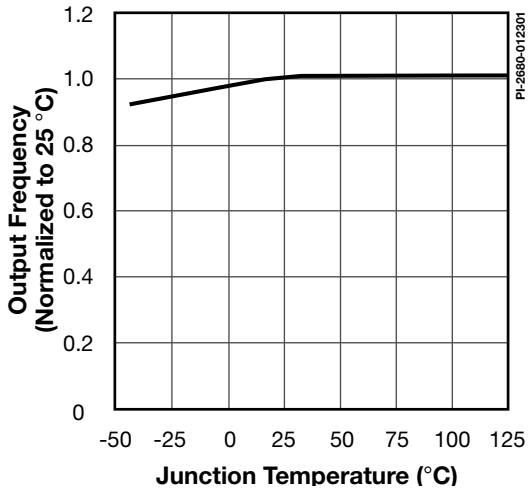

Figure 11. Frequency vs. Temperature.

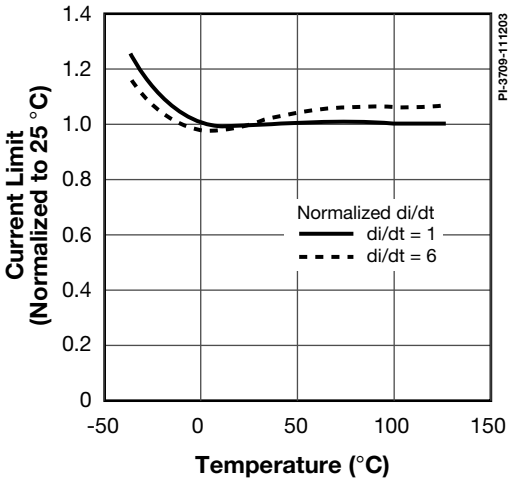

Figure 12. Current Limit vs. Temperature at Normalized di/dt.

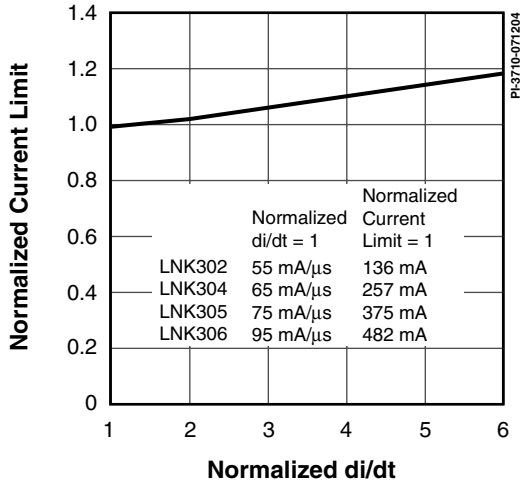

Figure 13. Current Limit vs. di/dt.

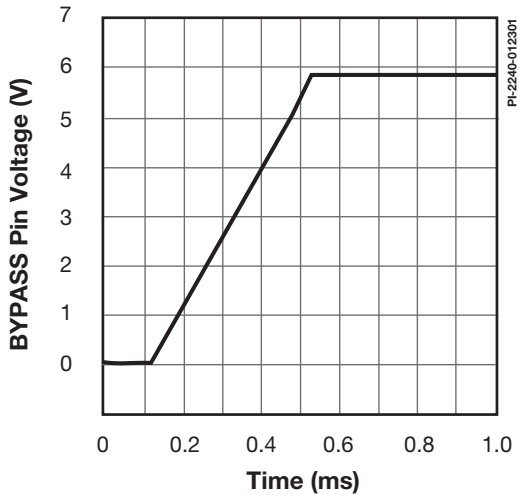

Figure 14. BYPASS Pin Start-up Waveform.

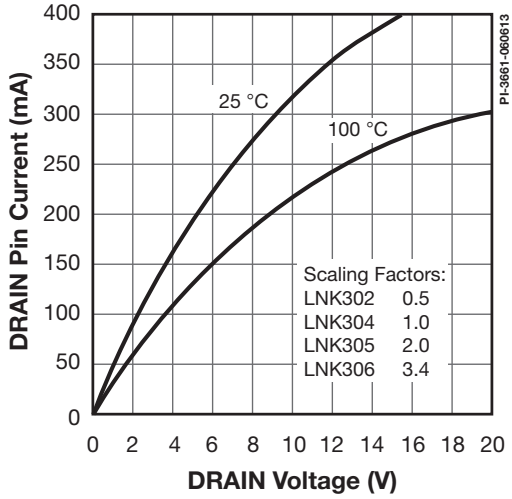

Figure 15. Output Characteristics.

Typical Performance Characteristics (cont.)

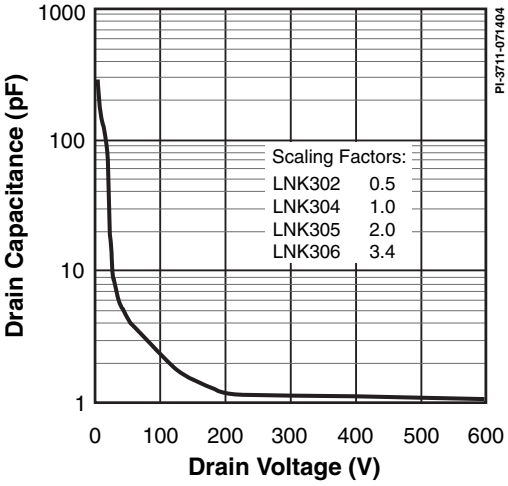

Figure 16. C_{OSS} vs. Drain Voltage.

Part Ordering Information

LNK 304 G N - TL

- **LinkSwitch Product Family**
- **TN Series Number**
- **Package Identifier**

G	Plastic Surface Mount DIP
P	Plastic DIP
D	Plastic SO-8C

- **Package Material**

N	Pure Matte Tin (RoHS Compliant)
G	RoHS Compliant and Halogen Free (D package only)

- **Tape & Reel and Other Options**

Blank	Standard Configurations
TL	Tape and Reel, 1 k pcs minimum for G Package. 2.5 k pcs for D Package. Not available for P Package.

PDIP-8B (P Package)

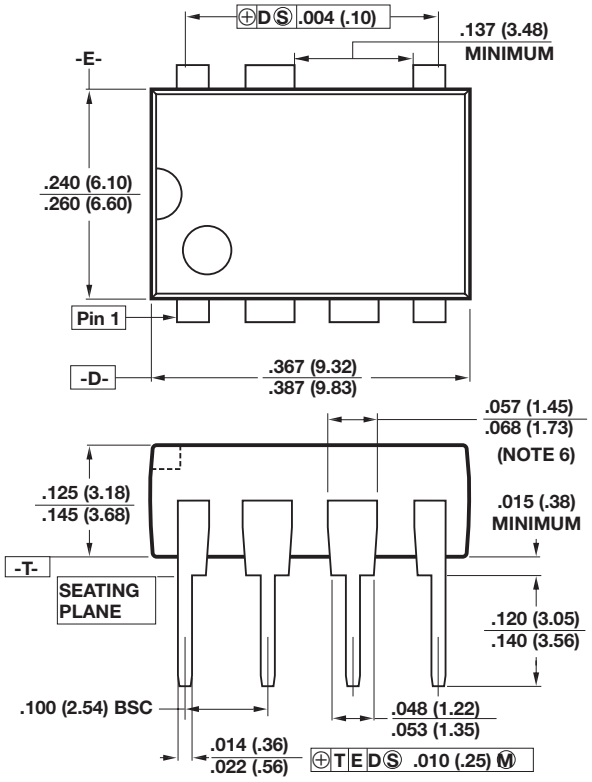

Notes:

1. Package dimensions conform to JEDEC specification MS-001-AB (Issue B 7/85) for standard dual-in-line (DIP) package with .300 inch row spacing.
2. Controlling dimensions are inches. Millimeter sizes are shown in parentheses.
3. Dimensions shown do not include mold flash or other protrusions. Mold flash or protrusions shall not exceed .006 (.15) on any side.
4. Pin locations start with Pin 1, and continue counter-clockwise to Pin 8 when viewed from the top. The notch and/or dimple are aids in locating Pin 1. Pin 6 is omitted.
5. Minimum metal to metal spacing at the package body for the omitted lead location is .137 inch (3.48 mm).
6. Lead width measured at package body.
7. Lead spacing measured with the leads constrained to be perpendicular to plane T.

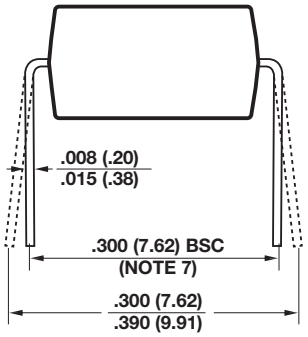

P08B

PI-2551-040110

SMD-8B (G Package)

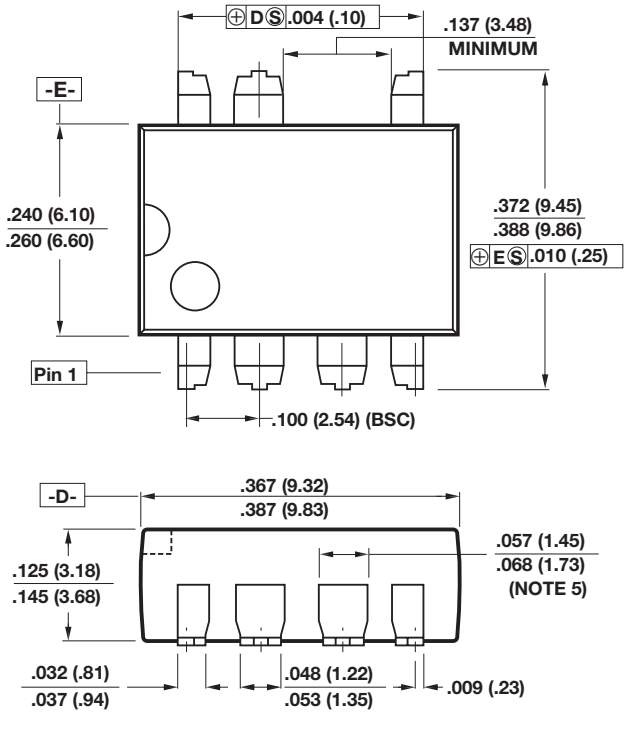

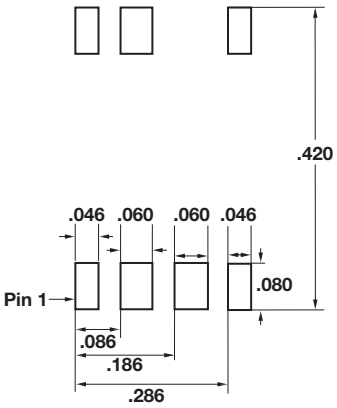

Solder Pad Dimensions

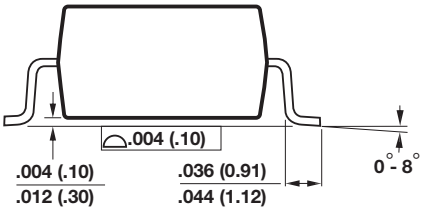

Notes:

1. Controlling dimensions are inches. Millimeter sizes are shown in parentheses.
2. Dimensions shown do not include mold flash or other protrusions. Mold flash or protrusions shall not exceed .006 (.15) on any side.
3. Pin locations start with Pin 1, and continue counter-clockwise to Pin 8 when viewed from the top. Pin 6 is omitted.
4. Minimum metal to metal spacing at the package body for the omitted lead location is .137 inch (3.48 mm).
5. Lead width measured at package body.
6. D and E are referenced datums on the package body.

G08B

PI-2546-040110

SO-8C (D Package)

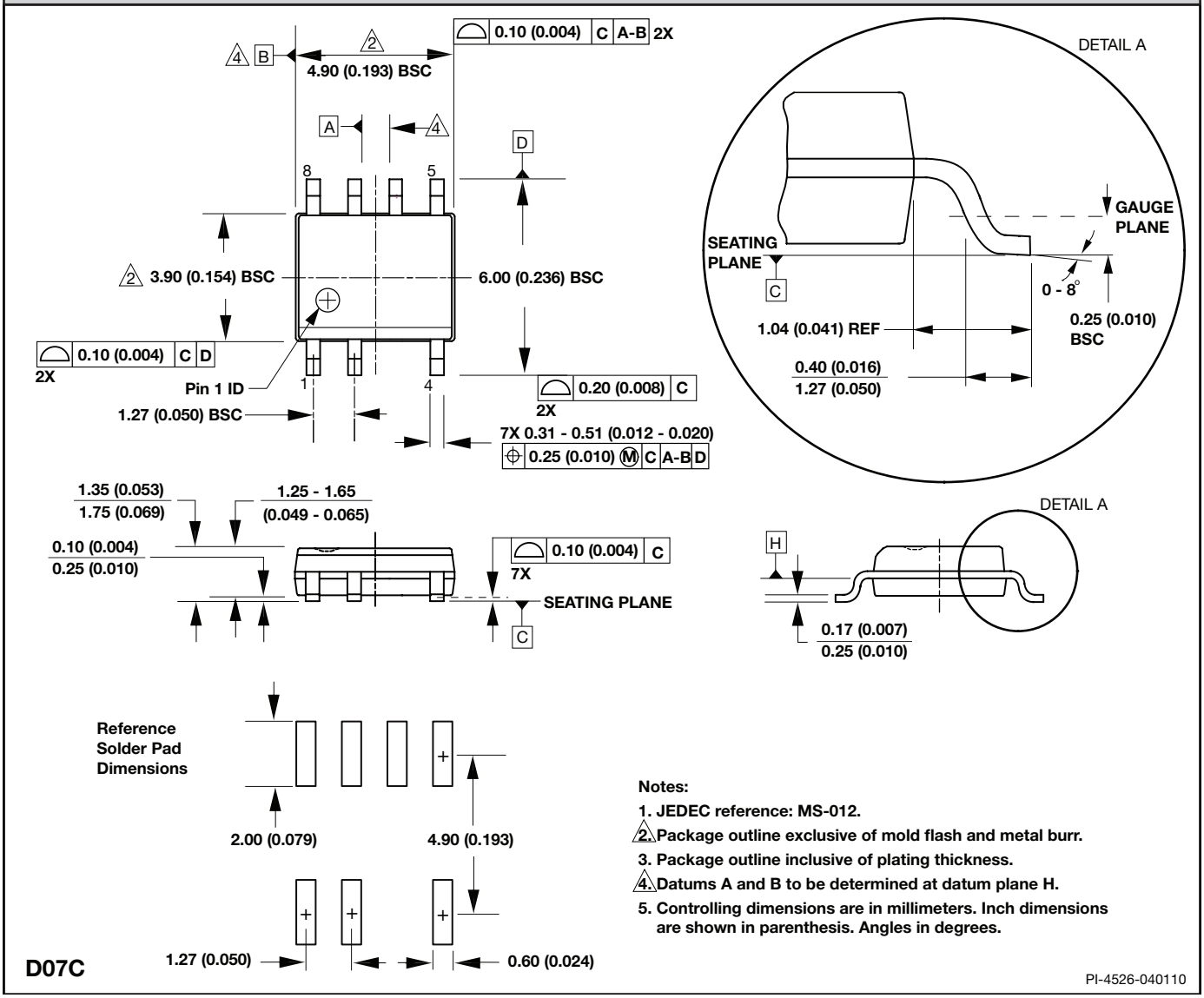

Notes:

1. JEDEC reference: MS-012.
2. Package outline exclusive of mold flash and metal burr.
3. Package outline inclusive of plating thickness.
4. Datums A and B to be determined at datum plane H.
5. Controlling dimensions are in millimeters. Inch dimensions are shown in parenthesis. Angles in degrees.

Revision	Notes	Date
C	Release data sheet.	03/03
D	Corrected Minimum On-Time.	01/04
E	Added LNK302.	08/04
F	Added lead-free ordering information.	12/04
G	Minor error corrections. Renamed Feedback Pin Voltage Parameter to Feedback Pin Voltage at Turnoff Threshold and removed condition.	03/05
H	Added SO-8C package.	12/06
I	Updated Part Ordering Information section with Halogen Free.	11/08
J	Updated Key Features column in Table 2. Updated style of data sheet.	06/13

For the latest updates, visit our website: www.powerint.com

Power Integrations reserves the right to make changes to its products at any time to improve reliability or manufacturability. Power Integrations does not assume any liability arising from the use of any device or circuit described herein. POWER INTEGRATIONS MAKES NO WARRANTY HEREIN AND SPECIFICALLY DISCLAIMS ALL WARRANTIES INCLUDING, WITHOUT LIMITATION, THE IMPLIED WARRANTIES OF MERCHANTABILITY, FITNESS FOR A PARTICULAR PURPOSE, AND NON-INFRINGEMENT OF THIRD PARTY RIGHTS.

Patent Information

The products and applications illustrated herein (including transformer construction and circuits external to the products) may be covered by one or more U.S. and foreign patents, or potentially by pending U.S. and foreign patent applications assigned to Power Integrations. A complete list of Power Integrations patents may be found at www.powerint.com. Power Integrations grants its customers a license under certain patent rights as set forth at http://www.powerint.com/ip.htm.

Life Support Policy

POWER INTEGRATIONS PRODUCTS ARE NOT AUTHORIZED FOR USE AS CRITICAL COMPONENTS IN LIFE SUPPORT DEVICES OR SYSTEMS WITHOUT THE EXPRESS WRITTEN APPROVAL OF THE PRESIDENT OF POWER INTEGRATIONS. As used herein:

1. A Life support device or system is one which, (i) is intended for surgical implant into the body, or (ii) supports or sustains life, and (iii) whose failure to perform, when properly used in accordance with instructions for use, can be reasonably expected to result in significant injury or death to the user.
2. A critical component is any component of a life support device or system whose failure to perform can be reasonably expected to cause the failure of the life support device or system, or to affect its safety or effectiveness.

The PI logo, TOPSwitch, TinySwitch, LinkSwitch, LYTSwitch, DPA-Switch, PeakSwitch, CAPZero, SENZero, LinkZero, HiperPFS, HiperTFS, HiperLCS, Qspeed, EcoSmart, Clampless, E-Shield, Filterfuse, StakFET, PI Expert and PI FACTS are trademarks of Power Integrations, Inc. Other trademarks are property of their respective companies. ©2014, Power Integrations, Inc.

Power Integrations Worldwide Sales Support Locations

World Headquarters
5245 Hellyer Avenue
San Jose, CA 95138, USA.
Main: +1-408-414-9200
Customer Service:
Phone: +1-408-414-9665
Fax: +1-408-414-9765
e-mail: usasales@powerint.com

China (Shanghai)
Rm 1601/1610, Tower 1,
Kerry Everbright City
No. 218 Tianmu Road West,
Shanghai, P.R.C. 200070
Phone: +86-21-6354-6323
Fax: +86-21-6354-6325
e-mail: chinasales@powerint.com

China (ShenZhen)
3rd Floor, Block A,
Zhongtou International Business
Center, No. 1061, Xiang Mei Rd,
FuTian District, ShenZhen,
China, 518040
Phone: +86-755-8379-3243
Fax: +86-755-8379-5828
e-mail: chinasales@powerint.com

Germany
Lindwurmstrasse 114
80337 Munich
Germany
Phone: +49-895-527-39110
Fax: +49-895-527-39200
e-mail: eurosales@powerint.com

India
#1, 14th Main Road
Vasanthanagar
Bangalore-560052 India
Phone: +91-80-4113-8020
Fax: +91-80-4113-8023
e-mail: indiasales@powerint.com

Italy
Via Milanese 20, 3rd. Fl.
20099 Sesto San Giovanni (MI)
Italy
Phone: +39-024-550-8701
Fax: +39-028-928-6009
e-mail: eurosales@powerint.com

Japan
Kosei Dai-3 Bldg.
2-12-11, Shin-Yokohama,
Kohoku-ku
Yokohama-shi Kanagwan
222-0033 Japan
Phone: +81-45-471-1021
Fax: +81-45-471-3717
e-mail: japansales@powerint.com

Korea
RM 602, 6FL
Korea City Air Terminal B/D, 159-6
Samsung-Dong, Kangnam-Gu,
Seoul, 135-728, Korea
Phone: +82-2-2016-6610
Fax: +82-2-2016-6630
e-mail: koreasales@powerint.com

Singapore
51 Newton Road
#19-01/05 Goldhill Plaza
Singapore, 308900
Phone: +65-6358-2160
Fax: +65-6358-2015
e-mail: singaporesales@powerint.com

Taiwan
5F, No. 318, Nei Hu Rd., Sec. 1
Nei Hu Dist.
Taipei 11493, Taiwan R.O.C.
Phone: +886-2-2659-4570
Fax: +886-2-2659-4550
e-mail: taiwansales@powerint.com

UK
First Floor, Unit 15, Meadway
Court, Rutherford Close,
Stevenage, Herts. SG1 2EF
United Kingdom
Phone: +44 (0) 1252-730-141
Fax: +44 (0) 1252-727-689
e-mail: eurosales@powerint.com

Applications Hotline
World Wide +1-408-414-9660

Applications Fax
World Wide +1-408-414-9760