THIS DRAWING IS A CONTROLLED DOCUMENT FOR TYCO ELECTRONICS CORPORATION
IT IS SUBJECT TO CHANGE AND THE CONTROLLING ENGINEERING ORGANIZATION
SHOULD BE CONTACTED FOR THE LATEST REVISION.

LOC	DIST
E	B

REVISIONS

P	LTR	DESCRIPTION	DATE	DWN	APVD
	BA	NEW RELEASE	18-NOV-08	SM	St.P

FOR FURTHER INFORMATION SEE DATA SHEET FOR
C SERIES-HIGH POWER RESISTORS

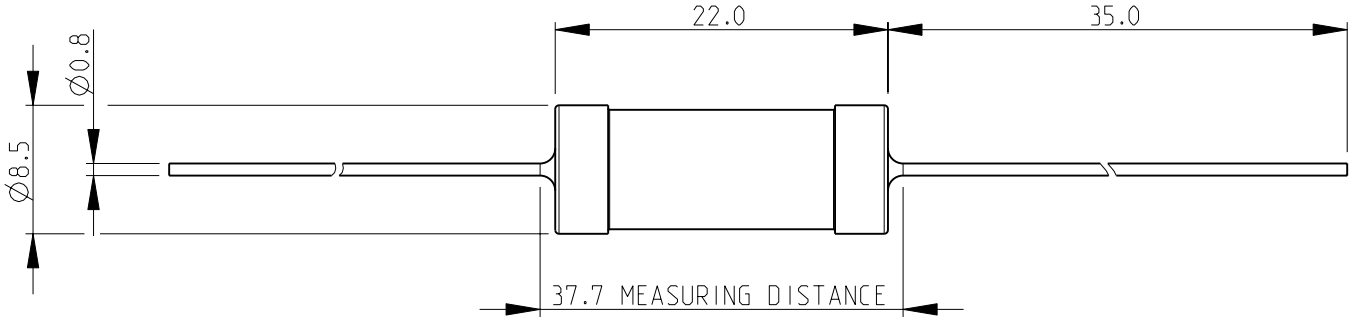

RoHS Compliant

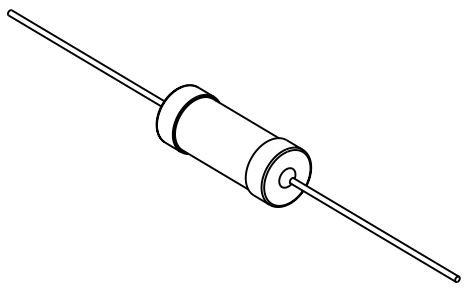

SCALE 1:1

THIS DRAWING IS UNPUBLISHED. © COPYRIGHT 2008 BY TYCO ELECTRONICS CORPORATION. ALL RIGHTS RESERVED. RELEASED FOR PUBLICATION 2008

DIMENSIONS: mm

TOLERANCES UNLESS OTHERWISE SPECIFIED:

0 PLC	±0.2
1 PLC	±0.1
2 PLC	±-
3 PLC	±-
4 PLC	±-
ANGLES	±5°

DWN SUBHASH.M 18-NOV-08
CHK PRAKASH.S 18-NOV-08
APVD STEPHEN.P 18-NOV-08
PRODUCT SPEC –
APPLICATION SPEC –
WEIGHT –

MATERIAL –
FINISH –

Tyco Electronics
Tyco Electronics Corporation
Dorcan, Swindon, SN3 5HH

NAME HIGH POWER RESISTORS SERIES C7

SIZE	CAGE CODE	DRAWING NO	RESTRICTED TO
A4	00779	C-1623772	–

CUSTOMER DRAWING

SCALE 2:1 SHEET 1 OF 1 REV BA

AMP 1469-35 REV 31MAR2000

Pro/ENGINEER DRAWING