# 360-001
## Non-Environmental Backshell
### with Strain Relief
### Low Profile - Rotatable Coupling

**360 F S 001 M 16 10 M 6**

- Product Series
- Connector Designator
- Angle and Profile
  - A = 90°
  - B = 45°
  - S = Straight
- Basic Part No.
- Finish (Table II)
- Shell Size (Table I)
- Cable Entry (Tables X, XI, XII)
- Strain Relief Style (H, A, M, F)
- Length: S only (1/2 inch increments: e.g. 6 = 3 inches)

**CONNECTOR DESIGNATORS**

**A-F-H-L-S**

**ROTATABLE COUPLING**

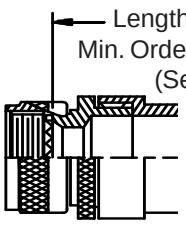


**STYLE 2 (STRAIGHT See Note 1)**

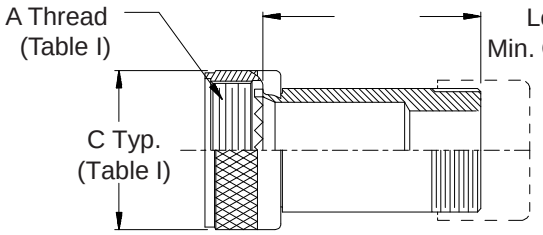


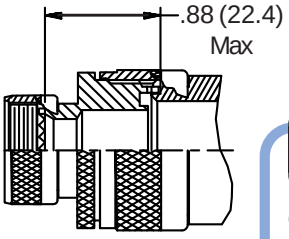


**STYLE 2 (45° - 90° See Note 1)**

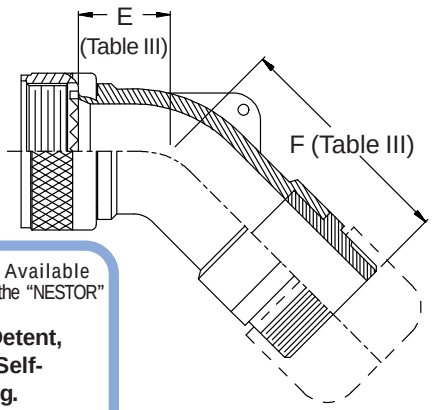


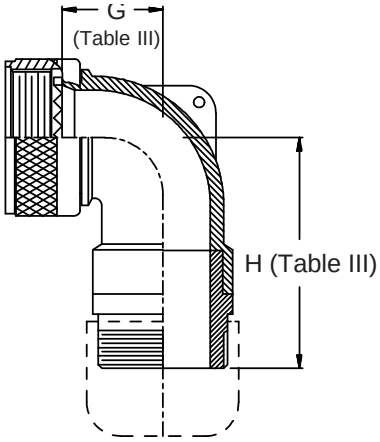


**-445** Now Available with the "NESTOR"

**Glenair's Non-Detent, Spring-Loaded, Self-Locking Coupling.**

**Add "-445" to Specify This AS85049 Style "N" Coupling Interface.**

**STYLE H**
Heavy Duty
(Table X)

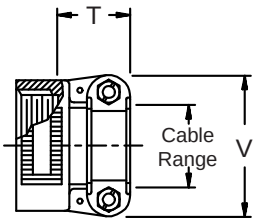


**STYLE A**
Medium Duty
(Table XI)

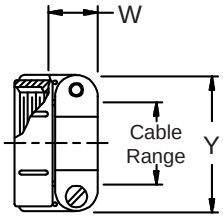


**STYLE M**
Medium Duty
(Table XI)

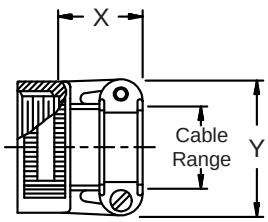


**STYLE F**
Light Duty
(Table XII)

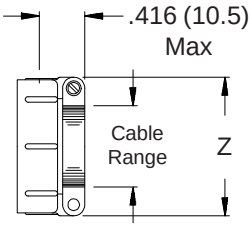


© 2005 Glenair, Inc. CAGE Code 06324 Printed in U.S.A.

# 360-001
## Non-Environmental Backshell
### with Strain Relief
### Low Profile - Rotatable Coupling

Glenair®

**TABLE III: DIMENSIONS**

| Shell Size Conn. Desig. A-F-L-S | H | E Max | | F Max | | G Max | | H Max | |
|---|---|---|---|---|---|---|---|---|---|
| 08 | 09 | .457 | (11.6) | 1.622 | (41.2) | .500 | (12.7) | 1.632 | (41.5) |
| 10 | 11 | .520 | (13.2) | 1.682 | (42.7) | .595 | (15.1) | 1.752 | (44.5) |
| 12 | 13 | .582 | (14.8) | 1.742 | (44.2) | .610 | (15.5) | 1.772 | (45.0) |
| 14 | 15 | .645 | (16.4) | 2.062 | (52.4) | .700 | (17.8) | 2.072 | (52.6) |
| 16 | 17 | .738 | (18.7) | 2.172 | (55.2) | .885 | (22.5) | 2.162 | (54.9) |
| 18 | 19 | .926 | (23.5) | 2.362 | (60.0) | .975 | (24.8) | 2.332 | (59.2) |
| 20 | 21 | .926 | (23.5) | 2.362 | (60.0) | .975 | (24.8) | 2.332 | (59.2) |
| 22 | 23 | 1.020 | (25.9) | 2.512 | (63.8) | 1.125 | (28.6) | 2.442 | (62.0) |
| 24 | 25 | 1.020 | (25.9) | 2.512 | (63.8) | 1.125 | (28.6) | 2.442 | (62.0) |
| 28 | | 1.145 | (29.1) | 2.562 | (65.1) | 1.225 | (31.1) | 2.612 | (66.3) |
| 32 | | 1.207 | (30.7) | 2.662 | (67.6) | 1.575 | (40.0) | 2.862 | (72.7) |
| 36 | | 1.238 | (31.4) | 2.752 | (69.9) | 1.775 | (45.1) | 2.862 | (72.7) |

**TABLE II: STANDARD FINISHES**

| GLENAIR SYMBOL | FINISH |
|---|---|
| B | Cadmium Plate, Olive Drab |
| C | Anodize, Black |
| G | Hard Coat, Anodic |
| M | Electroless Nickel |
| NF | Cadmium Plate, Olive Drab Over Electroless Nickel |

See Inside Back Cover for Additional Finish Options

**See inside back cover fold-out or pages 13 and 14 for unabridged Tables I and II.**

**TABLE X: CABLE ENTRY**

| Dash No. | T Max | | V Max | | Cable Range Min | | Cable Range Max | |
|---|---|---|---|---|---|---|---|---|
| 04 | .780 | (19.8) | .957 | (24.3) | .125 | (3.2) | .312 | (7.9) |
| 06 | .780 | (19.8) | 1.145 | (29.1) | .250 | (6.4) | .437 | (11.1) |
| 08 | .780 | (19.8) | 1.332 | (33.8) | .312 | (7.9) | .562 | (14.3) |
| 10 | .780 | (19.8) | 1.332 | (33.8) | .350 | (8.9) | .625 | (15.9) |
| 12 | .811 | (20.6) | 1.551 | (39.4) | .500 | (12.7) | .750 | (19.1) |
| 16 | .905 | (23.0) | 1.770 | (45.0) | .625 | (15.9) | .937 | (23.8) |
| 20 | 1.092 | (27.7) | 2.113 | (53.7) | .875 | (22.2) | 1.250 | (31.8) |
| 24 | 1.124 | (28.5) | 2.363 | (60.0) | 1.000 | (25.4) | 1.375 | (34.9) |
| 28 | 1.399 | (35.5) | 2.770 | (70.4) | 1.250 | (31.8) | 1.625 | (41.3) |
| 32 | 1.399 | (35.5) | 3.020 | (76.7) | 1.437 | (36.5) | 1.875 | (47.6) |

**TABLE XII: CABLE ENTRY**

| Dash No. | Z Max | | Cable Range Min | | Cable Range Max | |
|---|---|---|---|---|---|---|
| 02 | .968 | (24.6) | .125 | (3.2) | .250 | (6.4) |
| 03 | 1.046 | (26.6) | .250 | (6.4) | .375 | (9.5) |
| 04 | 1.156 | (29.4) | .312 | (7.9) | .500 | (12.7) |
| 05 | 1.218 | (30.9) | .437 | (11.1) | .625 | (15.9) |
| 06 | 1.343 | (34.1) | .562 | (14.3) | .750 | (19.1) |
| 07 | 1.468 | (37.3) | .687 | (17.4) | .875 | (22.2) |
| 08 | 1.593 | (40.5) | .812 | (20.6) | 1.000 | (25.4) |
| 10 | 1.843 | (46.8) | 1.062 | (27.0) | 1.250 | (31.8) |

**TABLE XI: CABLE ENTRY**

| Dash No. | W Max | | X Max | | Y Max | | Cable Range Min | | Cable Range Max | |
|---|---|---|---|---|---|---|---|---|---|---|
| 03* | .437 | (11.1) | .760 | (19.3) | .843 | (21.4) | .156 | (4.0) | .250 | (6.4) |
| 04* | .437 | (11.1) | .760 | (19.3) | .906 | (23.0) | .188 | (4.8) | .312 | (7.9) |
| 06* | .500 | (12.7) | .760 | (19.3) | 1.093 | (27.8) | .281 | (7.1) | .438 | (11.1) |
| 08 | .563 | (14.3) | .760 | (19.3) | 1.187 | (30.1) | .344 | (8.7) | .562 | (14.3) |
| 10 | .563 | (14.3) | .760 | (19.3) | 1.281 | (32.5) | .375 | (9.5) | .625 | (15.9) |
| 12 | .563 | (14.3) | .760 | (19.3) | 1.500 | (38.1) | .438 | (11.1) | .750 | (19.1) |
| 16 | .656 | (16.7) | 1.073 | (27.3) | 1.719 | (43.7) | .562 | (14.3) | .938 | (23.8) |
| 20 | .656 | (16.7) | 1.323 | (33.6) | 2.062 | (52.4) | .750 | (19.1) | 1.250 | (31.8) |
| 24 | .656 | (16.7) | 1.323 | (33.6) | 2.312 | (58.7) | .781 | (19.8) | 1.375 | (34.9) |
| 28 | 1.188 | (30.2) | 1.572 | (39.9) | 2.719 | (69.1) | .969 | (24.6) | 1.625 | (41.3) |
| 32* | 1.187 | (30.1) | 1.572 | (39.9) | 2.969 | (75.4) | 1.125 | (28.6) | 1.875 | (47.6) |
| 40* | 1.125 | (28.6) | 1.572 | (39.9) | 3.531 | (89.7) | 1.469 | (37.3) | 2.375 | (60.3) |

* Not available in Style M clamp.

1. When maximum cable entry (page 21) is exceeded, Style 2 will be supplied. Dimensions E, F, G and H will not apply. Please consult factory.
2. Metric dimensions (mm) are indicated in parentheses.
3. Cable range is defined as the accommodations range for the wire bundle or cable. Dimensions shown are not intended for inspection criteria.
4. Consult factory for shorter lengths on straight backshells.

© 2005 Glenair, Inc. CAGE Code 06324 Printed in U.S.A.