THIS DRAWING IS UNPUBLISHED. RELEASED FOR PUBLICATION -,- .
© COPYRIGHT - By - ALL RIGHTS RESERVED.

LOC	DIST
AF	50

REVISIONS

P	LTR	DESCRIPTION	DATE	DWN	APVD
	H1	REVISED PER ECO-11-004820	11MAR11	RK	HMR

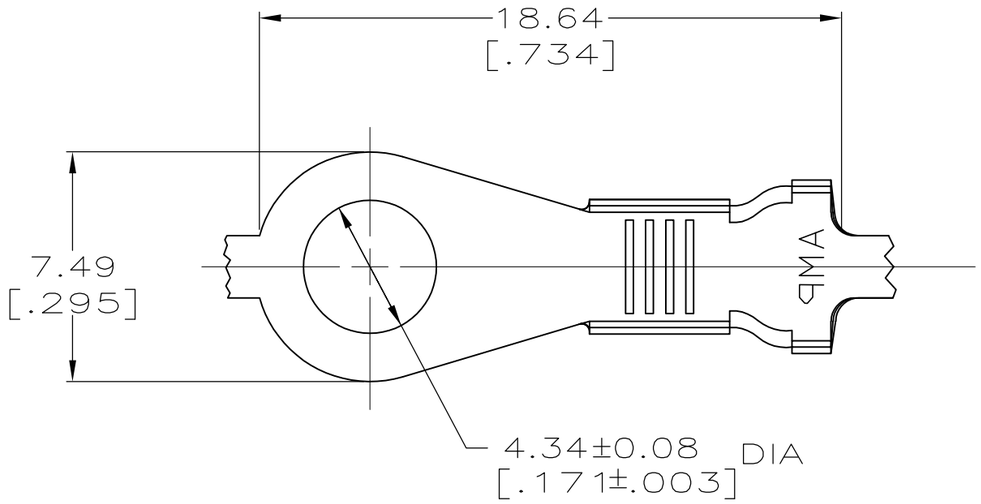

1 CONTINUOUS STRIP ON REELS.

2 WIRE SIZE IS [#18–#14] AWG.

3 INSULATION RANGE IS 2.54–3.56 [.100–.140] DIA.

4 STUD SIZE IS M4 [#8].

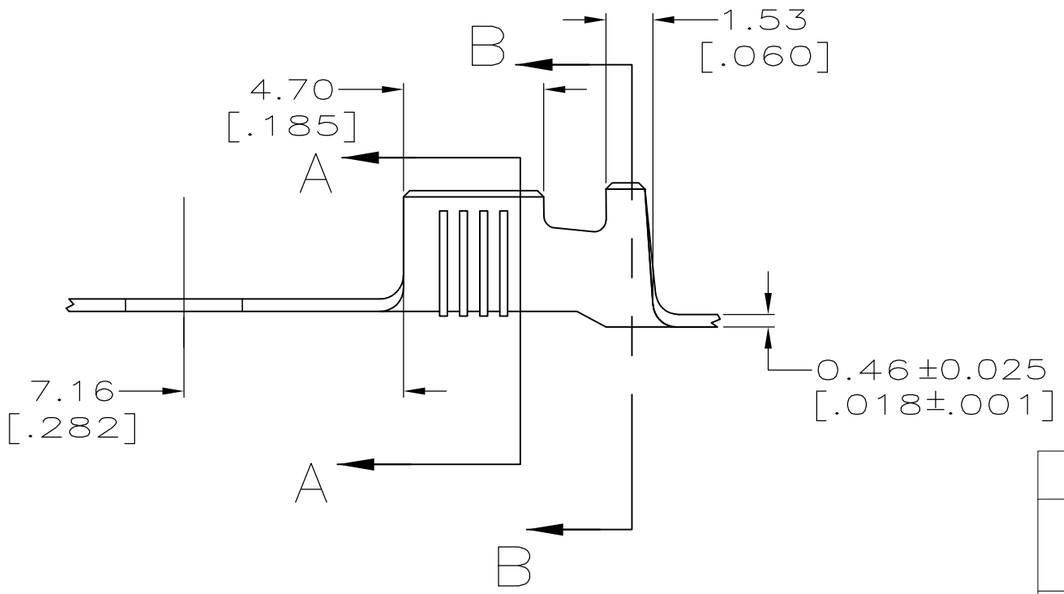

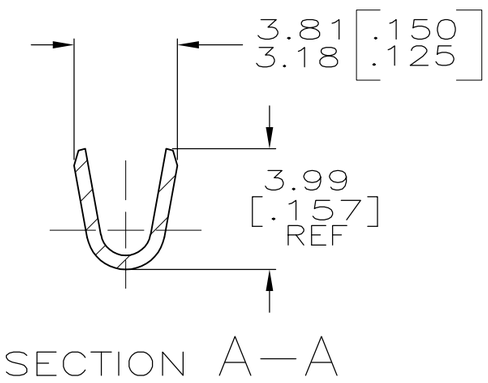

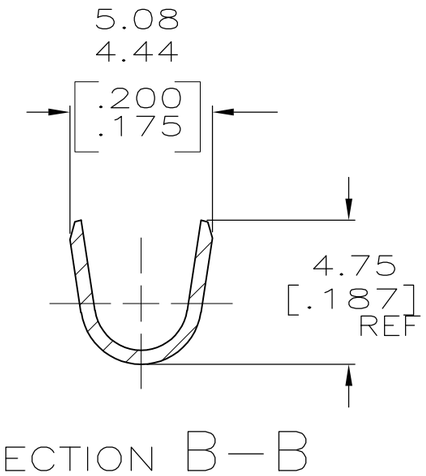

REELING REMARKS	FINISH	PART NO.
WITH PAPER	–	60771–3
WITHOUT PAPER	TIN	60771–2
	–	60771–1

THIS DRAWING IS A CONTROLLED DOCUMENT.

DIMENSIONS: mm [INCHES]

TOLERANCES UNLESS OTHERWISE SPECIFIED:

0 PLC	± –
1 PLC	± –
2 PLC	± 0.38 [.015]
3 PLC	± –
4 PLC	± –
ANGLES	± –

MATERIAL: H04 BRASS

FINISH: SEE TABLE

DWN	JR RUTH	21JUL99
CHK	MS FEHER	21JUL99
APVD	D DECKER	21JUL99
PRODUCT SPEC	—	
APPLICATION SPEC	—	
WEIGHT	—	

TE Connectivity

NAME: RING –

SIZE	CAGE CODE	DRAWING NO	RESTRICTED TO
A3	00779	C-60771	—

CUSTOMER DRAWING

SCALE	SHEET	REV
5:1	1 OF 1	H1