5 kV LED Emulator Input, Open Collector Output Isolators

Features

- Pin-compatible, drop-in upgrades for popular high-speed digital optocouplers
- Performance and reliability advantages vs. optocouplers
  - Resistant to temperature, age and forward current effects
  - 10x lower FIT rate for longer service life
  - Higher common-mode transient immunity: >50 kV/µs typical
  - Lower power and forward input diode current
- PCB footprint compatible with optocoupler packaging
- Wide range of product options
- 1 channel diode emulator input
- 3 to 30 V open collector output
- Propagation delay 30 ns
- Data rates dc to 15 Mbps
- Up to 5000 V_{RMS} isolation and 10 kV surge protection
- AEC-Q100 qualified
- Wide operating temperature range
  - –40 to +125 °C
- RoHS-compliant packages
  - SOIC-8 (Narrow body)
  - DIP8 (Gull-wing)
  - SDIP6 (Stretched SO-6)
- Automotive-grade OPNs available
  - AIAG compliant PPAP documentation support
  - IMDs and CAMDs listing support

Applications

- Industrial automation
- Motor controls and drives
- Isolated switch mode power supplies
- Isolated data acquisition
- Test and measurement equipment
- EV traction inverters

Safety Regulatory Approvals

- UL 1577 recognized
  - Up to 5000 Vrms for 1 minute
- CSA component notice 5A approval
  - IEC 60950-1, 60601-1 (reinforced insulation)
- VDE certification conformity
  - VDE0884 Part 10 (basic/reinforced insulation)
- CQC certification approval
  - GB4943.1

Description

The Si87xx isolators are pin-compatible, one-channel, drop-in replacements for popular optocouplers with data rates up to 15 Mbps. These devices isolate high-speed digital signals and offer performance, reliability, and flexibility advantages not available with optocoupler solutions. The Si87xx series is based on Silicon Labs' proprietary CMOS isolation technology for low-power and high-speed operation and are resistant to the wear-out effects found in optocouplers that degrade performance with increasing temperature, forward current, and device age. As a result, the Si87xx series offer longer service life and dramatically higher reliability compared to optocouplers. Ordering options include open collector output with and without integrated pull-up resistor and output enable options.

Automotive Grade is available for certain part numbers. These products are built using automotive-specific flows at all steps in the manufacturing process to ensure the robustness and low defectivity required for automotive applications.

Pin Assignments:
See page 20

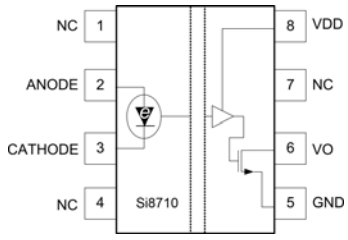

SOIC-8, DIP8
Open Collector Output

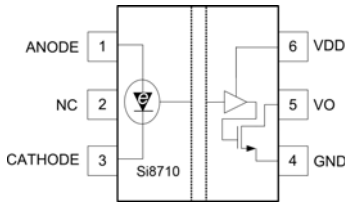

SDIP6
Open Collector Output

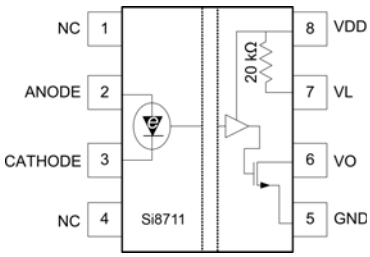

SOIC-8, DIP8
Open Collector Output
with 20 kΩ Pull-up Resistor

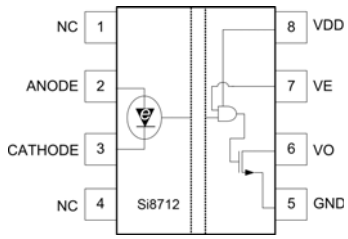

SOIC-8, DIP8
Open Collector Output
with Output Enable

Patent pending

Copyright © 2020 by Silicon Laboratories

Functional Block Diagram

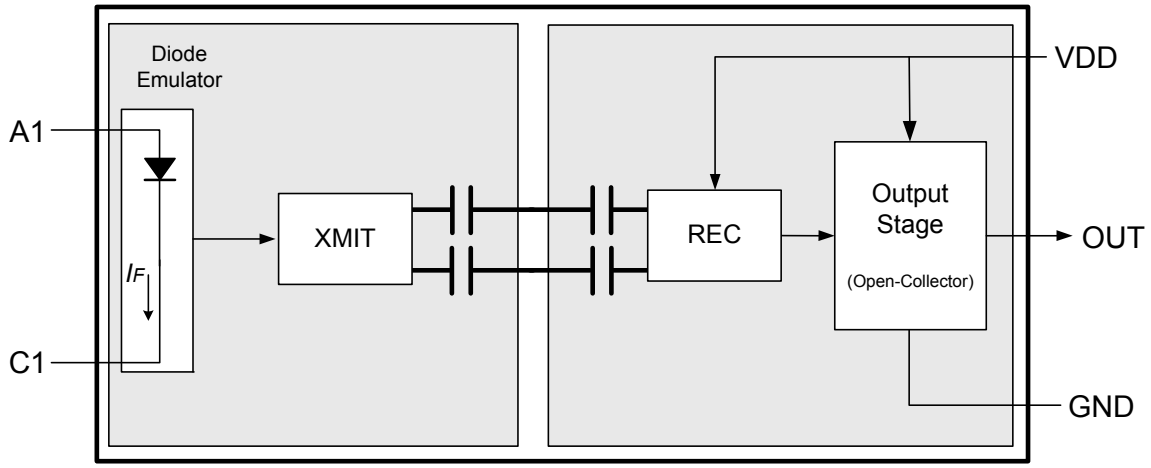

TABLE OF CONTENTS

Section	Page
1. Electrical Specifications	**4**
2. Functional Description	**14**
2.1. Theory of Operation	14
3. Technical Description	**15**
3.1. Device Behavior	15
3.2. Device Startup	15
4. Applications	**16**
4.1. Input Circuit Design	16
4.2. Output Circuit Design and Power Supply Connections	17
5. Pin Descriptions (SOIC-8, DIP8) Open Collector	**18**
6. Pin Descriptions (SOIC-8, DIP8) Output Enable	**19**
7. Pin Descriptions (SDIP6) Open Collector	**20**
8. Pin Descriptions (SOIC-8, DIP8) 20 kW Pull-Up Resistor	**21**
9. Ordering Guide	**22**
9.1. Automotive Grade OPNs	25
10. Package Outline: 8-Pin Narrow Body SOIC	**26**
11. Land Pattern: 8-Pin Narrow Body SOIC	**27**
12. Package Outline: DIP8	**28**
13. Land Pattern: DIP8	**29**
14. Package Outline: SDIP6	**30**
15. Land Pattern: SDIP6	**32**
16. Top Markings	**33**
16.1. Top Marking (8-Pin Narrow Body SOIC)	33
16.2. Top Marking Explanation (8-Pin Narrow Body SOIC)	33
16.3. Top Marking (DIP8)	34
16.4. Top Marking Explanation (DIP8)	34
16.5. Top Marking (SDIP6)	35
16.6. Top Marking Explanation (SDIP6)	35
Document Change List	**36**

1. Electrical Specifications

Table 1. Recommended Operating Conditions

Parameter	Symbol	Min	Typ	Max	Unit
V_{DD} Supply Voltage	V_{DD}	3	—	30	V
Input Current Si87xxA Devices Si87xxB Devices Si87xxC Devices	$I_{F(ON)}$ (see Figure 1)	 3 6 3	 — — —	 15 30 15	 mA mA mA
Operating Temperature (Ambient)	T_A	–40	—	125	°C

Table 2. Electrical Characteristics

V_{DD} = 5 V; GND = 0 V; T_A = –40 to +125 °C; typical specs at 25 °C; T_J = –40 to +140 °C

Parameter	Symbol	Test Condition	Min	Typ	Max	Unit
DC Parameters						
Supply Voltage	V_{DD}	(V_{DD}–GND)	3	—	30	V
Supply Current	I_{DD}	Output high or low (V_{DD} = 5 to 30 V)	—	—	1.7	mA
Input Current Threshold	$I_{F(TH)}$	Si87xxA devices Si87xxB devices Si87xxC devices	— — —	— — —	1.8 3.6 1.8	mA mA mA
Input Current Hysteresis	I_{HYS}	Si87xxA devices Si87xxB devices Si87xxC devices	— — —	0.17 0.34 0.17	— — —	mA mA mA
Input Forward Voltage (OFF)	$V_{F(OFF)}$	Measured at ANODE with respect to CATHODE.	—	—	1	V
Input Forward Voltage (ON)	$V_{F(ON)}$	Measured at ANODE with respect to CATHODE.	1.6	—	2.8	V
Input Capacitance	C_I	f = 100 kHz V_F = 0 V, V_F = 2 V	 — —	 15 15	 — —	 pF pF
Logic Low Output Voltage	V_{OL}	I_{OL} = 3 mA, V_{DD} = 3.3 or 5 V I_{OL} = 13 mA, V_{DD} = 5.5 V	— —	— —	0.4 0.7	V V
Logic High Output Current	I_{OH}	V_{DD} = V_{OUT} = 5.5 V V_{DD} = V_{OUT} = 24 V	— —	— —	0.5 1	µA µA
Peak Output Current	I_{OPK}	Peak DC collector current drive (V_{DD} = 5 V)	—	50	—	mA
Output Low Impedance	R_{OL}		—	—	54	Ω
Pull-up Resistor	R_{PU}	Using internal pull-up	—	20	—	kΩ
Enable High Min	V_{EH}		2	—	30	V
Enable Low Max	V_{EL}		—	—	0.8	V
Enable High Current Draw	I_{EH}	V_{DD} = V_{EH} = 5 V	—	20	—	µA
Enable Low Current Draw	I_{EL}	V_{DD} = 5 V, V_{EL} = 0 V	—	–10	0	µA

Table 2. Electrical Characteristics (Continued)

V_{DD} = 5 V; GND = 0 V; T_A = –40 to +125 °C; typical specs at 25 °C; T_J = –40 to +140 °C

Parameter	Symbol	Test Condition	Min	Typ	Max	Unit
AC Switching Parameters (V_{DD} = 5 V, R_L = 350 Ω, C_L = 15 pF)						
Maximum Data Rate	F_{DATA}	Si87xxA devices Si87xxB devices Si87xxC devices	DC DC DC	— — —	15 15 1	M_{BPS} M_{BPS} M_{BPS}
Minimum Pulse Width	MPW	Si87xxA devices Si87xxB devices Si87xxC devices	66 66 1	— — —	— — —	ns ns µs
Propagation Delay (Low-to-High)	t_{PLH}	C_L = 15 pF using 350 Ω pull-up	—	—	60	ns
Propagation Delay (High-to-Low)	t_{PHL}	C_L = 15 pF using 350 Ω pull-up	—	—	60	ns
Pulse Width Distortion	PWD	$\lvert t_{PLH} – t_{PHL} \rvert$	—	—	20	ns
Propagation Delay Skew	$t_{PSK(p-p)}$	$t_{PSK(P-P)}$ is the magnitude of the difference in prop delays between different units operating at same supply voltage, load, and ambient temp.	—	—	20	ns
Rise Time	t_R	C_L = 15 pF using 350 Ω pull-up	—	15	—	ns
Fall Time	t_F	C_L = 15 pF using 350 Ω pull-up	—	5	—	ns
Device Startup Time	t_{START}		—	—	40	µs
Common Mode Transient Immunity	CMTI	Output = low or high V_{CM} = 1500 V (See Figure 2) I_F = 3 mA for Si87xxA devices I_F = 6 mA for Si87xxB devices I_F = 3 mA for Si87xxC devices	 20 35 20	 35 50 35	 — — —	 kV/µs kV/µs kV/µs

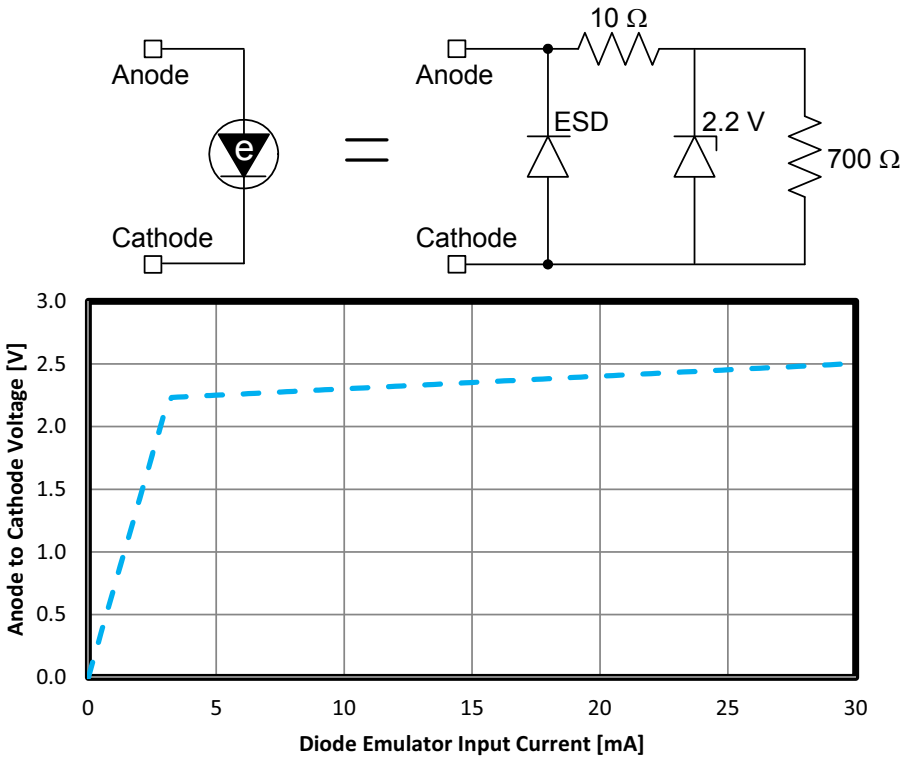

Figure 1. Diode Emulator Model and I-V Curve

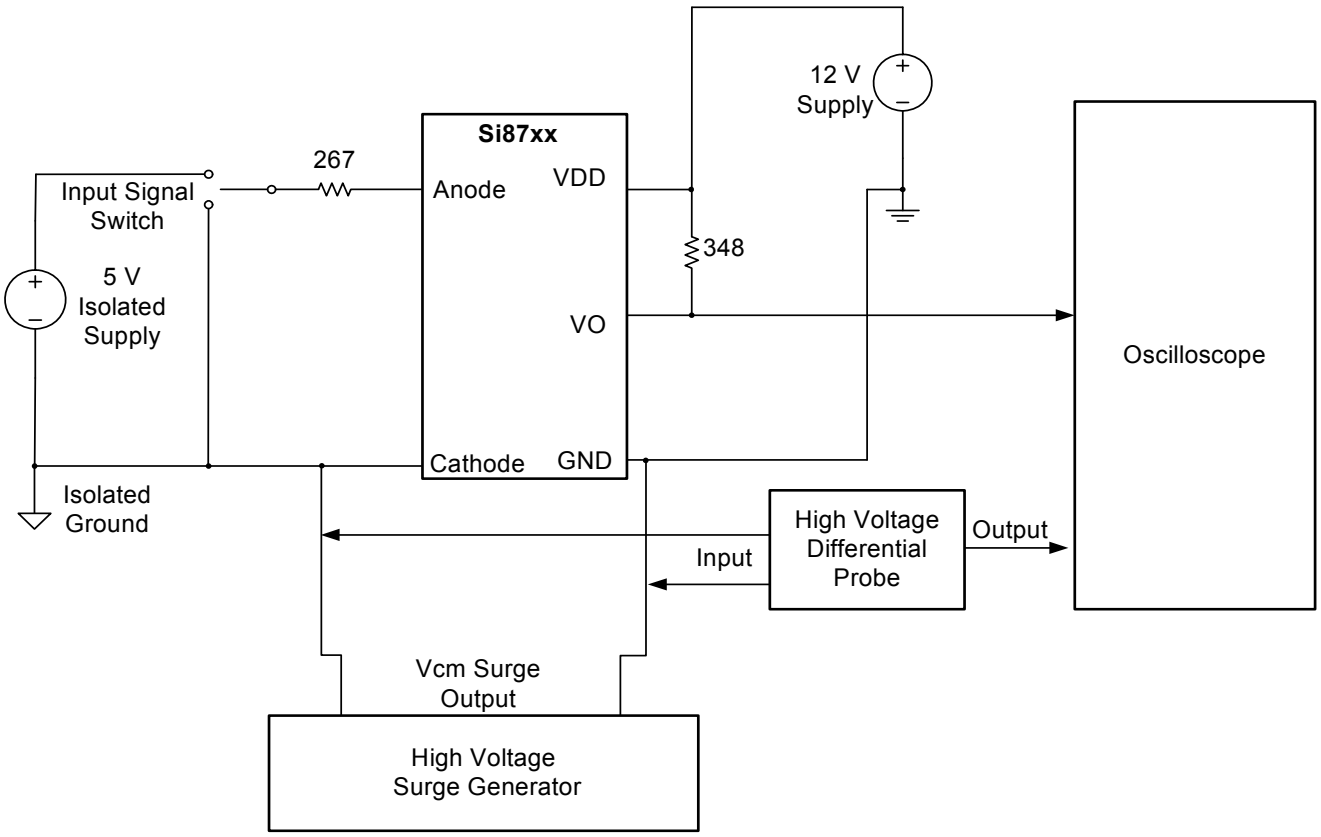

Figure 2. Common Mode Transient Immunity Characterization Circuit

Table 3. Regulatory Information*

CSA
The Si87xx is certified under CSA Component Acceptance Notice 5A. For more details, see Master Contract Number 232873.
60950-1: Up to 1000 V_{RMS} reinforced insulation working voltage; up to 1000 V_{RMS} basic insulation working voltage.
60601-1: Up to 250 V_{RMS} working voltage and 2 MOPP (Means of Patient Protection).
VDE
The Si87xx is certified according to VDE0884-10. For more details, see certificate 40037519.
VDE0884 Part 10: Up to 1414 V_{peak} for reinforced insulation working voltage.
UL
The Si87xx is certified under UL1577 component recognition program. For more details, see File E257455.
Rated up to 5000 V_{RMS} isolation voltage for basic protection.
CQC
The Si87xx is certified under GB4943.1-2011. For more details, see certificates CQC15001121489, CQC15001121490, CQC15001121284, and CQC15001121315.
Rated up to 1000 V_{RMS} reinforced insulation working voltage; up to 1000 V_{RMS} basic insulation working voltage.
***Note:** Regulatory Certifications apply to 3.75 kV_{RMS} rated devices which are production tested to 4.5 kV_{RMS} for 1 sec. Regulatory Certifications apply to 5.0 kV_{RMS} rated devices which are production tested to 6.0 kV_{RMS} for 1 sec. For more information, see "9.Ordering Guide" on page 22.

Table 4. Insulation and Safety-Related Specifications

Parameter	Symbol	Test Condition	Value			Unit
			SOIC-8	DIP8	SDIP6	
Nominal External Air Gap (Clearance)	CLR		4.7 min	7.2 min	9.6 min	mm
Nominal External Tracking (Creepage)	CPG		3.9 min	7.0 min	8.3 min	mm
Minimum Internal Gap (Internal Clearance)	DTI		0.016	0.016	0.016	mm
Tracking Resistance	CTI or PTI	IEC60112	600	600	600	V
Erosion Depth	ED		0.031	0.031	0.057	mm
Resistance (Input-Output)*	R_{IO}		10^{12}	10^{12}	10^{12}	Ω
Capacitance (Input-Output)*	C_{IO}	f = 1 MHz	1	1	1	pF

***Note:** To determine resistance and capacitance, the Si87xx is converted into a 2-terminal device. Pins 1–4 (1–3, SDIP6) are shorted together to form the first terminal, and pins 5–8 (4–6, SDIP6) are shorted together to form the second terminal. The parameters are then measured between these two terminals.

Table 5. IEC 60664-1 Ratings

Parameter	Test Condition	Specification		
		SOIC-8	DIP8	SDIP6
Basic Isolation Group	Material Group	I	I	I
Installation Classification	Rated Mains Voltages ≤ 150 V_{RMS}	I-IV	I-IV	I-IV
	Rated Mains Voltages ≤ 300 V_{RMS}	I-IV	I-IV	I-IV
	Rated Mains Voltages ≤ 450 V_{RMS}	I-III	I-III	I-IV
	Rated Mains Voltages ≤ 600 V_{RMS}	I-III	I-III	I-IV
	Rated Mains Voltages ≤ 1000 V_{RMS}	I-II	I-II	I-III

Table 6. VDE 0884-10 Insulation Characteristics*

Parameter	Symbol	Test Condition	Characteristic			Unit
			SOIC-8	DIP8	SDIP6	
Maximum Working Insulation Voltage	V_{IORM}		630	891	1140	V peak
Input to Output Test Voltage	V_{PR}	Method b1 (V_{IORM} x 1.875 = V_{PR}, 100% Production Test, t_m = 1 sec, Partial Discharge < 5 pC)	1181	1671	2138	V peak
Transient Overvoltage	V_{IOTM}	t = 60 sec	6000	6000	8000	V peak
Surge Voltage	V_{IOSM}	Tested per IEC 60065 with surge voltage of 1.2 µs/50 µs Si87xx tested with magnitude 6250 V x 1.6 = 10 kV	6250	6250	6250	V peak
Pollution Degree (DIN VDE 0110, Table 1)			2	2	2	
Insulation Resistance at T_S, V_{IO} = 500 V	R_S		$>10^9$	$>10^9$	$>10^9$	Ω

***Note:** This isolator is suitable for reinforced electrical isolation only within the safety limit data. Maintenance of the safety data is ensured by protective circuits. The Si87xx provides a climate classification of 40/125/21.

Table 7. IEC Safety Limiting Values

Parameter	Symbol	Test Condition	Max			Unit
			SOIC-8	DIP8	SDIP6	
Case Temperature	T_S		140	140	140	°C
Input Current	I_S	θ_{JA} = 110 °C/W (SOIC-8), 110 °C/W (DIP8), 105 °C/W (SDIP6), V_F = 2.8 V, T_J = 140 °C, T_A = 25 °C	370	370	390	mA
Output Power	P_S		1	1	1	W
Note: Maximum value allowed in the event of a failure; also see the thermal derating curve in Figures 3, 4, and 5.						

Table 8. Thermal Characteristics

Parameter	Symbol	Typ			Unit
		SOIC-8	DIP8	SDIP6	
IC Junction-to-Air Thermal Resistance	θ_{JA}	110	110	105	ºC/W

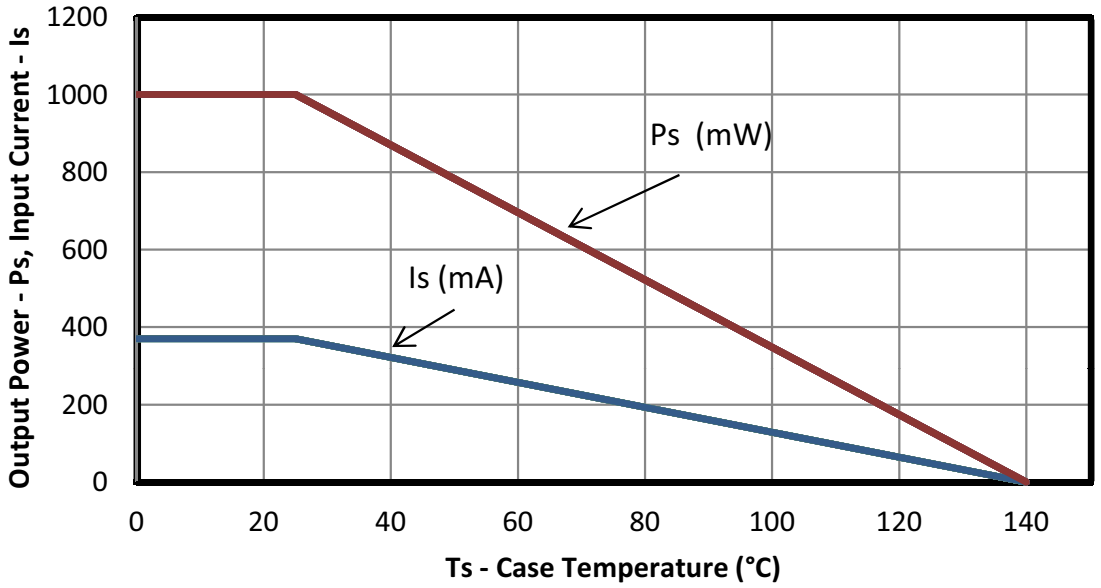

Figure 3. (SOIC-8) Thermal Derating Curve, Dependence of Safety Limiting Values with Case Temperature per VDE0884 part 10

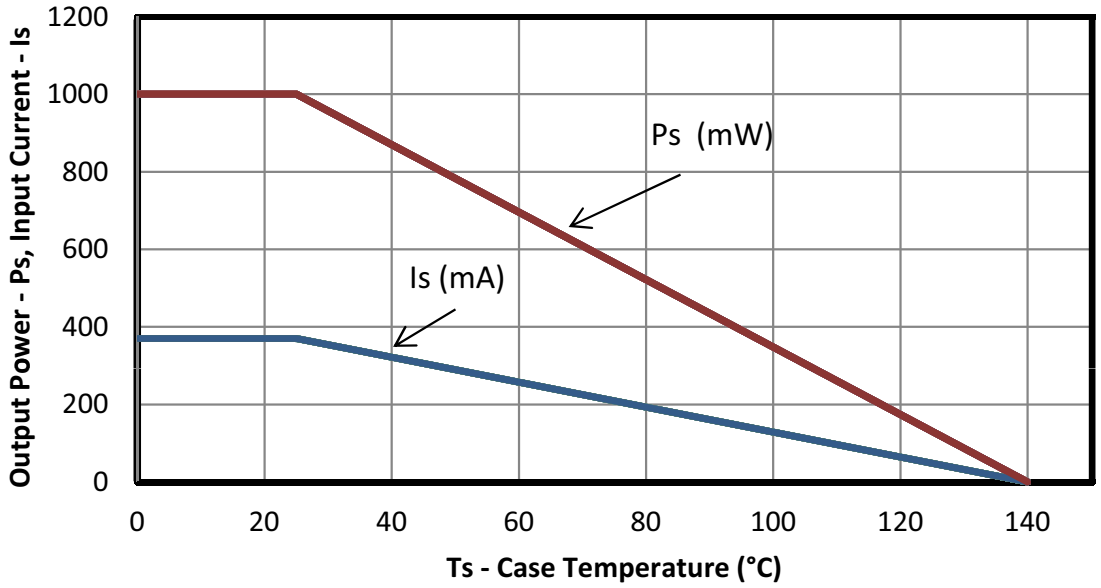

Figure 4. (DIP8) Thermal Derating Curve, Dependence of Safety Limiting Values with Case Temperature per VDE0884 part 10

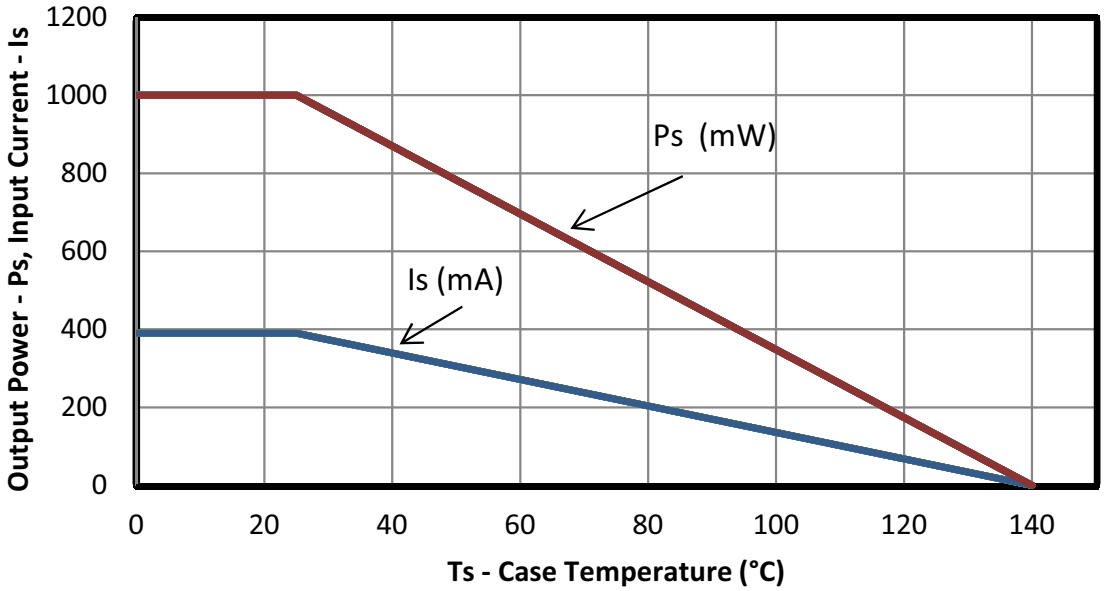

Figure 5. (SDIP6) Thermal Derating Curve, Dependence of Safety Limiting Values with Case Temperature per VDE0884 part 10

Table 9. Absolute Maximum Ratings*

Parameter	Symbol	Min	Max	Unit
Storage Temperature	T_{STG}	–65	+150	°C
Operating Temperature	T_A	–40	+125	°C
Junction Temperature	T_J	—	+140	°C
Average Forward Input Current Si87xxA Devices Si87xxB Devices Si87xxC Devices	$I_{F(AVG)}$	 — — —	 15 30 15	 mA mA mA
Peak Transient Input Current (< 1 µs pulse width, 300 ps)	I_{FTR}	—	1	A
Reverse Input Voltage	V_R	—	0.3	V
Supply Voltage	V_{DD}	–0.5	36	V
Output Voltage	V_{OUT}	–0.5	36	V
Enable Voltage	V_{OUT}	–0.5	V_{DD}+0.5	V
Output Sink Current	I_{SINK}	—	15	mA
Average Output Current	$I_{O(AVG)}$	—	8	mA
Peak Output Current (V_{DD} = 5 V)	I_{OPK}	—	75	mA
Input Power Dissipation	P_I	—	90	mW
Output Power Dissipation	P_O	—	50	mW
Total Power Dissipation	P_T	—	140	mW
Lead Solder Temperature (10 s)		—	260	°C
HBM Rating ESD		3	—	kV
Machine Model ESD		200	—	V
CDM		500	—	V
Maximum Isolation Voltage (1 s) SOIC-8		—	4500	V_{RMS}
Maximum Isolation Voltage (1 s) DIP8		—	4500	V_{RMS}
Maximum Isolation Voltage (1 s) SDIP6		—	6500	V_{RMS}

***Note:** Permanent device damage may occur if the absolute maximum ratings are exceeded. Functional operation should be restricted to the conditions specified in the operational sections of this data sheet.

2. Functional Description

2.1. Theory of Operation

The Si87xx are pin-compatible, one-channel, drop-in replacements for popular optocouplers with data rates up to 15 Mbps. The operation of an Si87xx channel is analogous to that of an opto coupler, except an RF carrier is modulated instead of light. This simple architecture provides a robust isolated data path and requires no special considerations or initialization at start-up. A simplified block diagram for the Si87xx is shown in Figure 6.

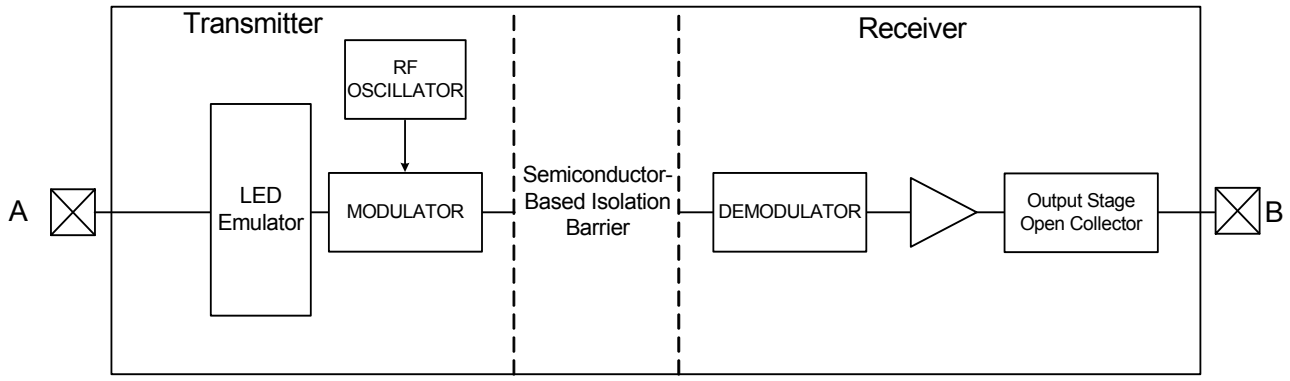

Figure 6. Simplified Channel Diagram

3. Technical Description

3.1. Device Behavior

Truth tables for the Si87xx are summarized in Table 10.

Table 10. Si87xx Truth Table Summary[1]

Input	V_{DD}	EN[2]	V_O[3]
OFF	> UVLO	H	HIGH
OFF	> UVLO	L	HIGH
OFF	< UVLO	H	HIGH
OFF	< UVLO	L	HIGH
ON	> UVLO	H	LOW
ON	> UVLO	L	HIGH
ON	< UVLO	H	HIGH
ON	< UVLO	L	HIGH

Notes:
1. This truth table assumes V_{DD} is powered. UVLO is typically 2.8 V.
2. Si8712 only.
3. The output voltage level is determined by the external pull-up supply.

3.2. Device Startup

During start-up, Output V_O floats and its voltage level is determined by the external pull-up until V_{DD} rises above the UVLO+ threshold for a minimum time period of t_{START}. Following this, the output is low when the current flowing from anode to cathode is > $I_{F(ON)}$. Device startup, normal operation, and shutdown behavior is shown in Figure 7.

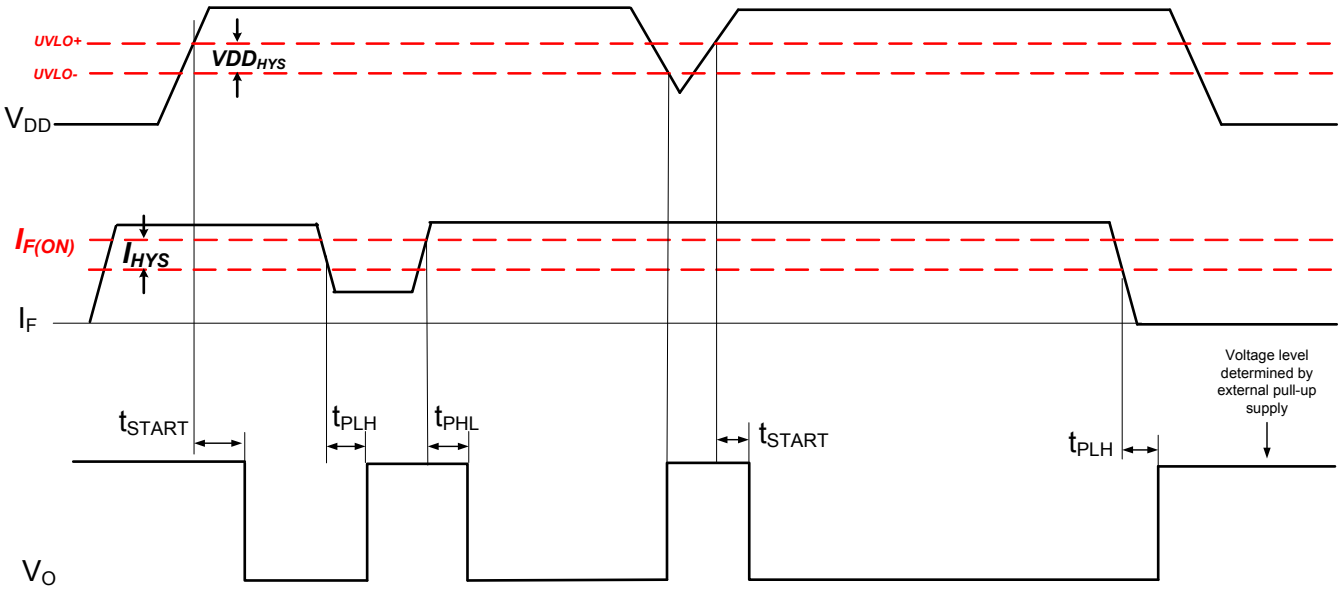

Figure 7. Si87xx Operating Behavior ($I_F \geq I_{F(MIN)}$ when $V_F \geq V_{F(MIN)}$)

4. Applications

The following sections detail the input and output circuits necessary for proper operation of the Si87xx family.

4.1. Input Circuit Design

Opto coupler manufacturers typically recommend the circuits shown in Figures 8 and 9. These circuits are specifically designed to improve opto-coupler input common-mode rejection and increase noise immunity.

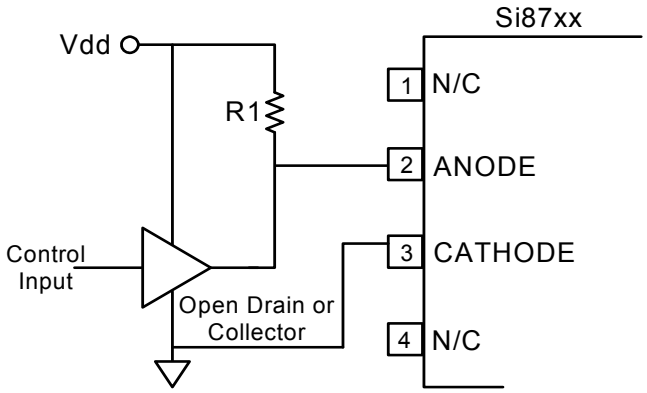

Figure 8. Si87xx Input Circuit

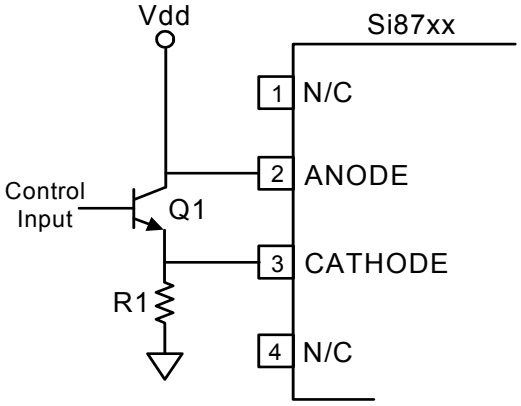

Figure 9. High CMR Si87xx Input Circuit

The optically-coupled circuit of Figure 8 turns the LED on when the control input is high. However, internal capacitive coupling from the LED to the power and ground conductors can momentarily force the LED into its off state when the anode and cathode inputs are subjected to a high common-mode transient. The circuit shown in Figure 9 addresses this issue by using a value of R1 sufficiently low to overdrive the LED, ensuring it remains on during an input common-mode transient. Q1 shorts the LED off in the low output state, again increasing common-mode transient immunity.

Some opto coupler applications recommend reverse-biasing the LED when the control input is off to prevent coupled noise from energizing the LED. The Si87xx input circuit requires less current and has twice the off-state noise margin compared to opto couplers. However, high CMR opto coupler designs that overdrive the LED (see Figure 9) may require increasing the value of R1 to limit input current I_F to its maximum rating when using the Si87xx. In addition, there is no benefit in driving the Si87xx input diode into reverse bias when in the off state. Consequently, opto coupler circuits using this technique should either leave the negative bias circuitry unpopulated or modify the circuitry (e.g., add a clamp diode or current limiting resistor) to ensure that the anode pin of the Si87xx is no more than –0.3 V with respect to the cathode when reverse-biased.

New designs should consider the input circuit configurations of Figure 10, which are more efficient than those of Figures 8 and 9. As shown, S1 and S2 represent any suitable switch, such as a BJT or MOSFET, analog transmission gate, processor I/O, etc. Also, note that the Si87xx input can be driven from the I/O port of any MCU or FPGA capable of sourcing a minimum of 6 mA (see Figure 10B). Additionally, note that the Si87xx propagation delay and output drive do not significantly change for values of I_F between $I_{F(MIN)}$ and $I_{F(MAX)}$.

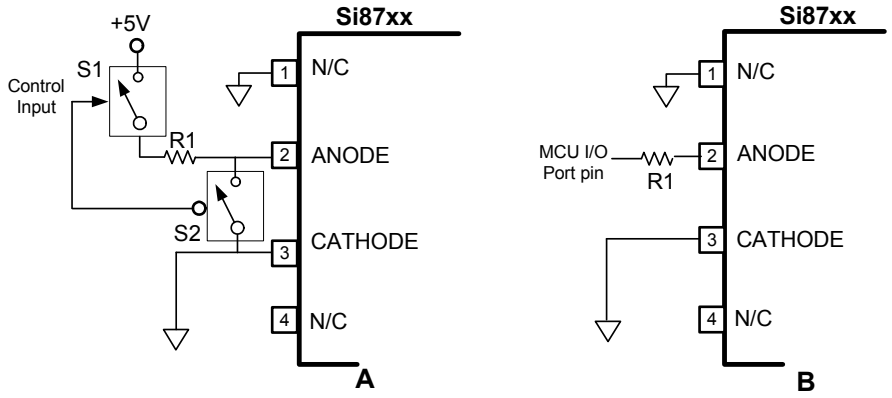

Figure 10. Si87xx Other Input Circuit Configurations

4.2. Output Circuit Design and Power Supply Connections

The speed of the open collector circuit is dependent upon the supply, VCC, the pullup resistor, R_L, and the load modeled by C_L. Figure 11 illustrates three common circuit output configurations. For V_{DD} = 5 V operation, R_L>350 Ω is recommended to ensure proper V_{OL} levels. For V_{DD} = 30 V operation, R_L > 2.1 kΩ is recommended to ensure proper V_{OL} levels. If the enable pin is used (see Figure 11B) and two separate supplies power V_{DD} and the V_O pullup resistor, the enable pin should be referenced to the V_{DD} pin because V_O cannot exceed V_{DD} by more than 0.5 V. Figure 11C illustrates a circuit using the internal 20 kΩ resistor.

Note that GND can be biased at, above, or below ground as long as the voltage on V_{DD} with respect to GND is a maximum of 30 V. V_{DD} decoupling capacitors should be placed as close to the package pins as possible. The optimum values for these capacitors depend on load current and the distance between the chip and its power source. It is recommended that 0.1 and 1 µF bypass capacitors be used to reduce high-frequency noise and maximize performance. Opto replacement applications should limit their supply voltages to 30 V or less.

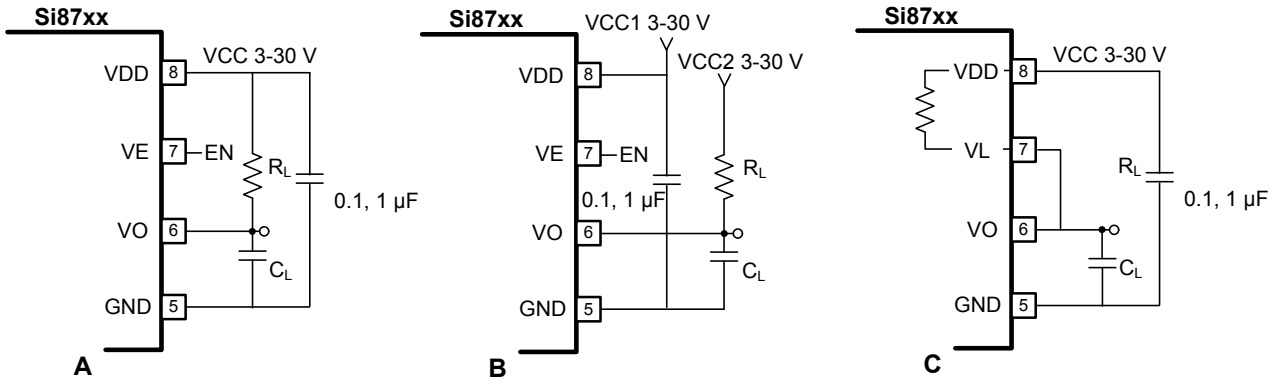

Figure 11. Si87xx Output Circuit Configurations

5. Pin Descriptions (SOIC-8, DIP8) Open Collector

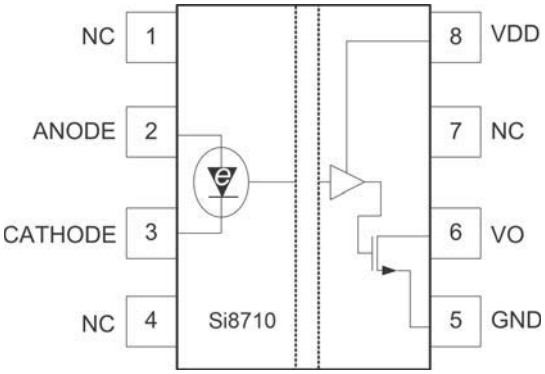

Figure 12. Pin Configuration

Table 11. Pin Descriptions (SOIC-8, DIP8) Open Collector

Pin	Name	Description
1	NC*	No connect.
2	ANODE	Anode of LED emulator. V_O follows the signal applied to this input with respect to the CATHODE input.
3	CATHODE	Cathode of LED emulator. V_O follows the signal applied to ANODE with respect to this input.
4	NC*	No connect.
5	GND	External MOSFET source connection and ground reference for V_{DD}. This terminal is typically connected to ground but may be tied to a negative or positive voltage.
6	V_O	Output signal.
7	NC*	No connect.
8	V_{DD}	Output-side power supply input referenced to GND (30 V max).
***Note:** No Connect. These pins are not internally connected. To maximize CMTI performance, these pins should be connected to the ground plane.		

6. Pin Descriptions (SOIC-8, DIP8) Output Enable

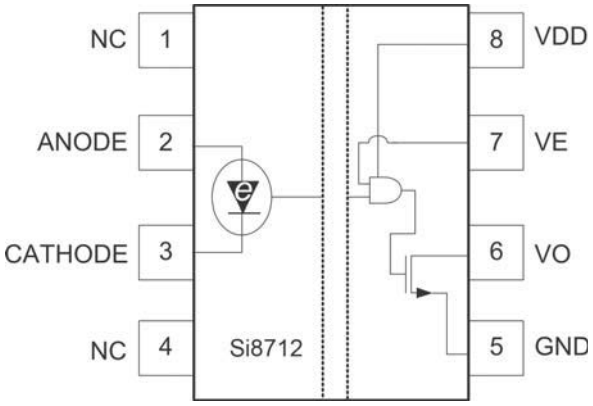

Figure 13. Pin Configuration

Table 12. Pin Descriptions (SOIC-8, DIP8) Output Enable

Pin	Name	Description
1	NC*	No connect.
2	ANODE	Anode of LED emulator. V_O follows the signal applied to this input with respect to the CATHODE input.
3	CATHODE	Cathode of LED emulator. V_O follows the signal applied to ANODE with respect to this input.
4	NC*	No connect.
5	GND	External MOSFET source connection and ground reference for V_{DD}. This terminal is typically connected to ground but may be tied to a negative or positive voltage.
6	V_O	Output signal.
7	V_E	Output enable. Tied to V_{DD} to enable output.
8	V_{DD}	Output-side power supply input referenced to GND (30 V max).
***Note:** No Connect. These pins are not internally connected. To maximize CMTI performance, these pins should be connected to the ground plane.		

7. Pin Descriptions (SDIP6) Open Collector

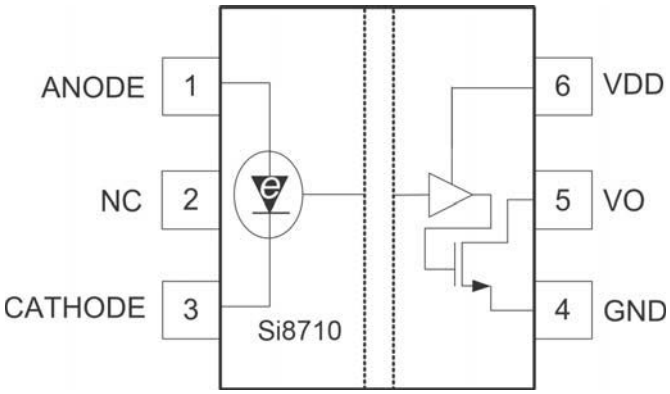

Figure 14. Pin Configuration

Table 13. Pin Descriptions (SDIP6) Open Collector

Pin	Name	Description
1	ANODE	Anode of LED emulator. V_O follows the signal applied to this input with respect to the CATHODE input.
2	NC*	No connect.
3	CATHODE	Cathode of LED emulator. V_O follows the signal applied to ANODE with respect to this input.
4	GND	External MOSFET source connection and ground reference for V_{DD}. This terminal is typically connected to ground but may be tied to a negative or positive voltage.
5	V_O	Output signal.
6	V_{DD}	Output-side power supply input referenced to GND (30 V max).
***Note:** No Connect. These pins are not internally connected. To maximize CMTI performance, these pins should be connected to the ground plane.		

8. Pin Descriptions (SOIC-8, DIP8) 20 kΩ Pull-Up Resistor

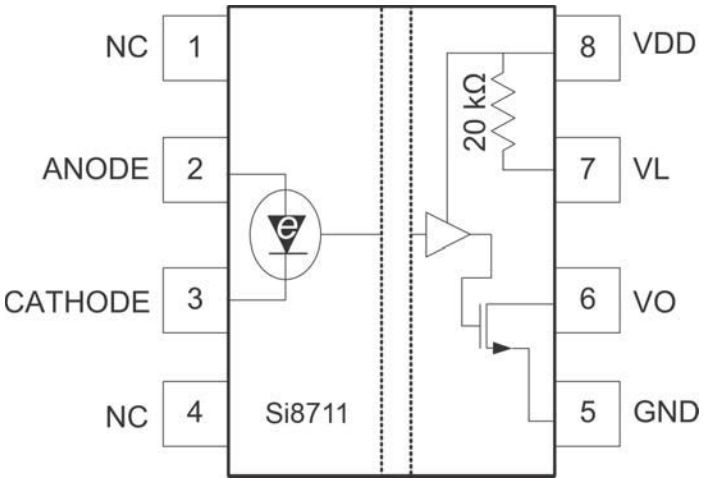

Figure 15. Pin Configuration

Table 14. Pin Descriptions (SOIC-8, DIP8) 20 kΩ Pull-Up Resistor

Pin	Name	Description
1	NC*	No connect.
2	ANODE	Anode of LED emulator. V_O follows the signal applied to this input with respect to the CATHODE input.
3	CATHODE	Cathode of LED emulator. V_O follows the signal applied to ANODE with respect to this input.
4	NC*	No connect.
5	GND	External MOSFET source connection and ground reference for V_{DD}. This terminal is typically connected to ground but may be tied to a negative or positive voltage.
6	V_O	Output signal.
7	V_L	Output Pull-Up Load. Tie to V_O to enable load.
8	V_{DD}	Output-side power supply input referenced to GND (30 V max).
***Note:** No Connect. These pins are not internally connected. To maximize CMTI performance, these pins should be connected to the ground plane.		

9. Ordering Guide

Table 15. Si87xx Ordering Guide[1,2,3]

New Ordering Part Number (OPN)	Ordering Options				
	Input/Output Configuration	Data Rate (Cross Reference)	Insulation Rating	Temp Range	Pkg Type
Open Collector Output (Available in SOIC-8, DIP8, and SDIP6)					
Si8710AC-B-IS	LED input Open collector output	15 Mbps ACPL-W611, PS9303L2 (Functional Match)	3.75 kVrms	–40 to +125 °C	SOIC-8
Si8710BC-B-IS	High CMTI LED input Open collector output	15 Mbps ACPL-W611, PS9303L2 (Functional Match)	3.75 kVrms	–40 to +125 °C	SOIC-8
Si8710CC-B-IS	LED input Open collector output	1 Mbps ACPL-W611, PS9303L2 (Functional Match)	3.75 kVrms	–40 to +125 °C	SOIC-8
Si8710AC-B-IP	LED input Open collector output	15 Mbps HCPL-4502	3.75 kVrms	–40 to +125 °C	DIP8/GW
Si8710BC-B-IP	High CMTI LED input Open collector output	15 Mbps HCPL-4502	3.75 kVrms	–40 to +125 °C	DIP8/GW
Si8710CC-B-IP	LED input Open collector output	1 Mbps HCPL-4502	3.75 kVrms	–40 to +125 °C	DIP8/GW
Si8710AD-B-IS	LED input Open collector output	15 Mbps ACPL-W611, PS9303L2	5.0 kVrms	–40 to +125 °C	SDIP6
Si8710BD-B-IS	High CMTI LED input Open collector output	15 Mbps ACPL-W611, PS9303L2	5.0 kVrms	–40 to +125 °C	SDIP6
Si8710CD-B-IS	LED input Open collector output	1 Mbps ACPL-W611, PS9303L2	5.0 kVrms	–40 to +125 °C	SDIP6

Notes:
1. All packages are RoHS-compliant with peak solder reflow temperatures of 260 °C according to the JEDEC industry standard classifications.
2. “Si” and “SI” are used interchangeably.
3. AEC-Q100 qualified.

Table 15. Si87xx Ordering Guide[1,2,3] (Continued)

New Ordering Part Number (OPN)	Ordering Options				
	Input/Output Configuration	Data Rate (Cross Reference)	Insulation Rating	Temp Range	Pkg Type
Open Collector Output with 20 kΩ Pullup Resistor (Available in SOIC-8 and DIP8)					
Si8711AC-B-IS	LED input Open collector output with integrated pullup	15 Mbps HCPL-4506 (Functional Match)	3.75 kVrms	–40 to +125 °C	SOIC-8
Si8711BC-B-IS	High CMTI LED input Open collector output with integrated pullup	15 Mbps HCPL-4506 (Functional Match)	3.75 kVrms	–40 to +125 °C	SOIC-8
Si8711CC-B-IS	LED input Open collector output with integrated pullup	1 Mbps HCPL-4506 (Functional Match)	3.75 kVrms	–40 to +125 °C	SOIC-8
Si8711AC-B-IP	LED input Open collector output with integrated pullup	15 Mbps HCPL-4506	3.75 kVrms	–40 to +125 °C	DIP8/GW
Si8711BC-B-IP	High CMTI LED input Open collector output with integrated pullup	15 Mbps HCPL-4506	3.75 kVrms	–40 to +125 °C	DIP8/GW
Si8711CC-B-IP	LED input Open collector output with integrated pullup	1 Mbps HCPL-4506	3.75 kVrms	–40 to +125 °C	DIP8/GW

Notes:
1. All packages are RoHS-compliant with peak solder reflow temperatures of 260 °C according to the JEDEC industry standard classifications.
2. “Si” and “SI” are used interchangeably.
3. AEC-Q100 qualified.

Table 15. Si87xx Ordering Guide[1,2,3] (Continued)

New Ordering Part Number (OPN)	Ordering Options				
	Input/Output Configuration	Data Rate (Cross Reference)	Insulation Rating	Temp Range	Pkg Type
Open Collector Output with Output Enable (Available in SOIC-8 and DIP8)					
Si8712AC-B-IS	LED input Open collector output with enable	15 Mbps HCPL-261x/260x (Functional Match)	3.75 kVrms	–40 to +125 °C	SOIC-8
Si8712BC-B-IS	High CMTI LED input Open collector output with enable	15 Mbps HCPL-261x/260x (Functional Match)	3.75 kVrms	–40 to +125 °C	SOIC-8
Si8712CC-B-IS	LED input Open collector output with enable	1 Mbps HCPL-261x/260x (Functional Match)	3.75 kVrms	–40 to +125 °C	SOIC-8
Si8712AC-B-IP	LED input Open collector output with enable	15 Mbps HCPL-261x/260x	3.75 kVrms	–40 to +125 °C	DIP8/GW
Si8712BC-B-IP	High CMTI LED input Open collector output with enable	15 Mbps HCPL-261x/260x	3.75 kVrms	–40 to +125 °C	DIP8/GW
Si8712CC-B-IP	LED input Open collector output with enable	1 Mbps HCPL-261x/260x	3.75 kVrms	–40 to +125 °C	DIP8/GW

Notes:
1. All packages are RoHS-compliant with peak solder reflow temperatures of 260 °C according to the JEDEC industry standard classifications.
2. “Si” and “SI” are used interchangeably.
3. AEC-Q100 qualified.

9.1. Automotive Grade OPNs

Automotive-grade devices are built using automotive-specific flows at all steps in the manufacturing process to ensure robustness and low defectivity. These devices are supported with AIAG-compliant Production Part Approval Process (PPAP) documentation, and feature International Material Data System (IMDS) and China Automotive Material Data System (CAMDS) listing. Qualifications are compliant with AEC-Q100, and a zero-defect methodology is maintained throughout definition, design, evaluation, qualification, and mass production steps.

Table 16. Si87xx Ordering Guide[1,2,3]

New Ordering Part Number (OPN)	Ordering Options				
	Input/Output Configuration	Data Rate (Cross Reference)	Insulation Rating	Temp Range	Pkg Type
Si8710AC-AS	LED input Open collector output	15 Mbps ACPL-W611 PS9303L2 (Functional Match)	3.75 kVrms	–40 to +125 °C	SOIC-8
Si8710CC-AS	LED input Open collector output	1 Mbps ACPL-W611 PS9303L2 (Functional Match)	3.75 kVrms	–40 to +125 °C	SOIC-8
Si8710CD-AS	LED input Open collector output	1 Mbps ACPL-W611 PS9303L2	5.0 kVrms	–40 to +125 °C	SDIP-6
Si8711CC-AS	LED input Open collector output with integrated pullup	1 Mbps HCPL-4506 (Functional Match)	3.75 kVrms	–40 to +125 °C	SOIC-8

Notes:

1. All packages are RoHS-compliant.
2. “Si” and “SI” are used interchangeably.
3. An "R" at the end of the part number denotes tape and reel packaging option.
4. Automotive-Grade devices (with an "–A" suffix) are identical in construction materials, topside marking, and electrical parameters to their Industrial-Grade (with a "–I" suffix) version counterparts. Automotive-Grade products are produced utilizing full automotive process flows and additional statistical process controls throughout the manufacturing flow. The Automotive-Grade part number is included on shipping labels.
5. Additional Ordering Part Numbers may be available in Automotive-Grade. Please contact your local Silicon Labs sales representative for further information.

10. Package Outline: 8-Pin Narrow Body SOIC

Figure 16 illustrates the package details for the Si87xx in an 8-pin narrow-body SOIC package. Table 17 lists the values for the dimensions shown in the illustration.

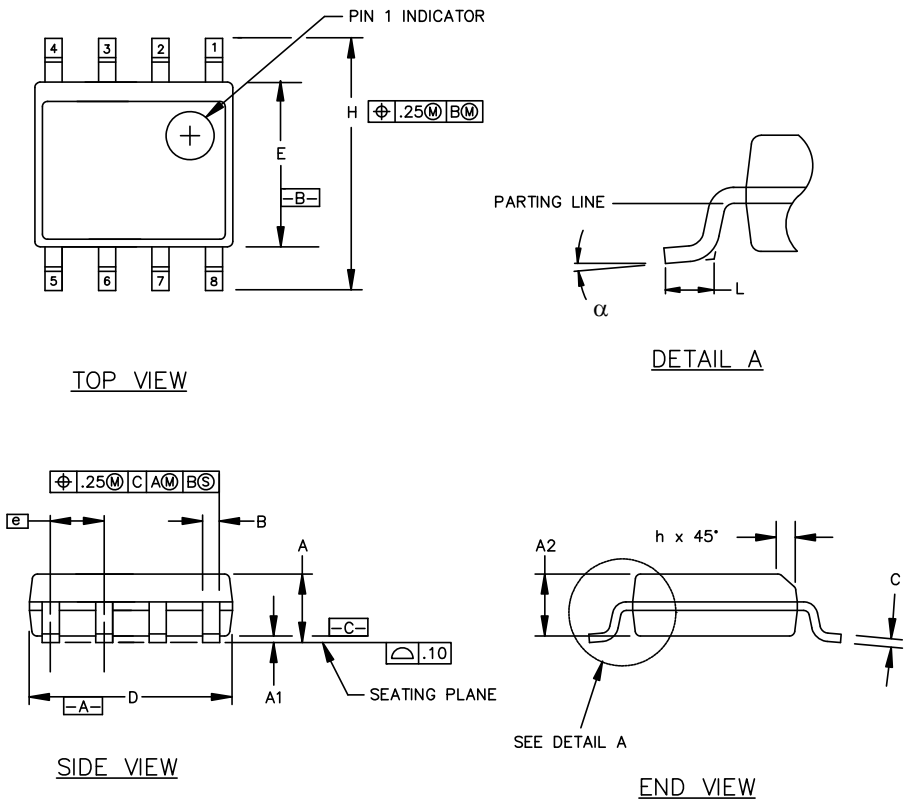

Figure 16. 8-Pin Narrow Body SOIC Package

Table 17. 8-Pin Narrow Body SOIC Package Diagram Dimensions

Symbol	Millimeters	
	Min	Max
A	1.35	1.75
A1	0.10	0.25
A2	1.40 REF	1.55 REF
B	0.33	0.51
C	0.19	0.25
D	4.80	5.00
E	3.80	4.00
e	1.27 BSC	
H	5.80	6.20
h	0.25	0.50
L	0.40	1.27
∝	0°	8°

11. Land Pattern: 8-Pin Narrow Body SOIC

Figure 17 illustrates the recommended land pattern details for the Si87xx in an 8-pin narrow-body SOIC. Table 18 lists the values for the dimensions shown in the illustration.

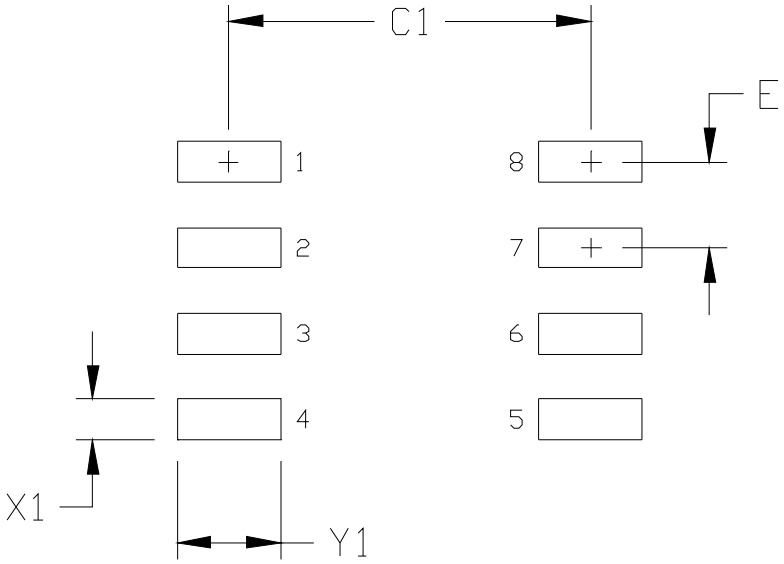

Figure 17. 8-Pin Narrow Body SOIC Land Pattern

Table 18. 8-Pin Narrow Body SOIC Land Pattern Dimensions

Dimension	Feature	(mm)
C1	Pad Column Spacing	5.40
E	Pad Row Pitch	1.27
X1	Pad Width	0.60
Y1	Pad Length	1.55

Notes:
1. This Land Pattern Design is based on IPC-7351 pattern SOIC127P600X173-8N for Density Level B (Median Land Protrusion).
2. All feature sizes shown are at Maximum Material Condition (MMC) and a card fabrication tolerance of 0.05 mm is assumed.

12. Package Outline: DIP8

Figure 18 illustrates the package details for the Si87xx in a DIP8 package. Table 19 lists the values for the dimensions shown in the illustration.

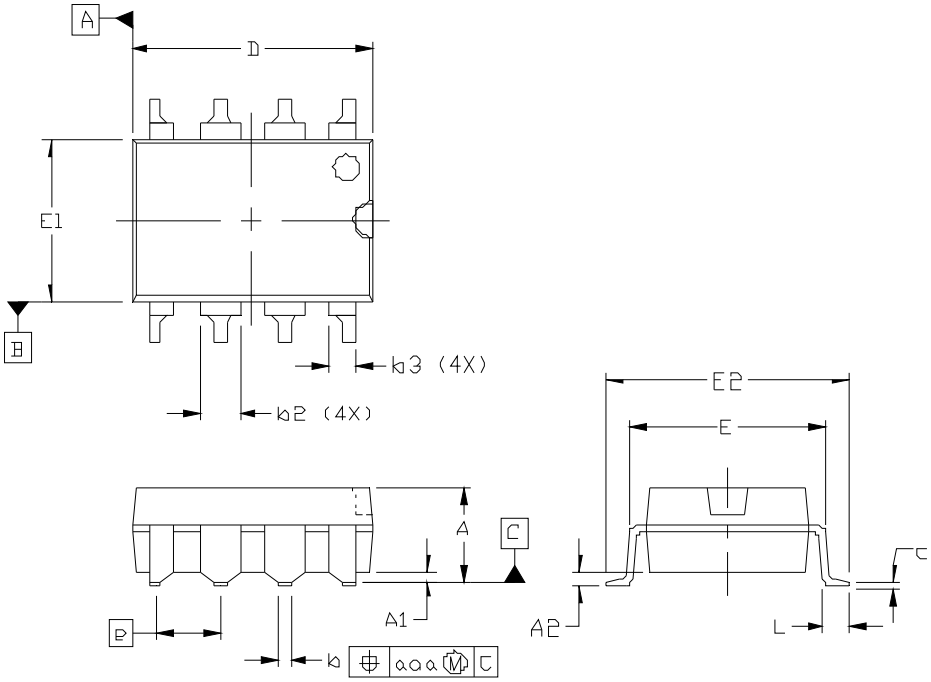

Figure 18. DIP8 Package

Table 19. DIP8 Package Diagram Dimensions

Dimension	Min	Max
A	—	4.19
A1	0.55	0.75
A2	3.17	3.43
b	0.35	0.55
b2	1.14	1.78
b3	0.76	1.14
c	0.20	0.33
D	9.40	9.90
E	7.37	7.87
E1	6.10	6.60
E2	9.40	9.90
e	2.54 BSC.	
L	0.38	0.89
aaa	—	0.25

Notes:
1. All dimensions shown are in millimeters (mm) unless otherwise noted.
2. Dimensioning and Tolerancing per ANSI Y14.5M-1994.

13. Land Pattern: DIP8

Figure 19 illustrates the recommended land pattern details for the Si87xx in a DIP8 package. Table 20 lists the values for the dimensions shown in the illustration.

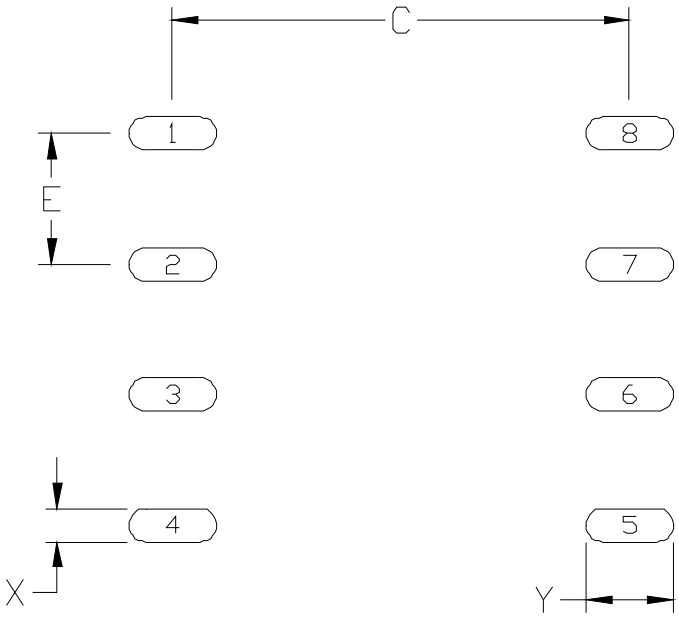

Figure 19. DIP8 Land Pattern

Table 20. DIP8 Land Pattern Dimensions*

Dimension	Min	Max
C	8.85	8.90
E	2.54 BSC	
X	0.60	0.65
Y	1.65	1.70
***Note:** This Land Pattern Design is based on the IPC-7351 specification.		

14. Package Outline: SDIP6

Figure 20 illustrates the package details for the Si87xx in an SDIP6 package. Table 21 lists the values for the dimensions shown in the illustration.

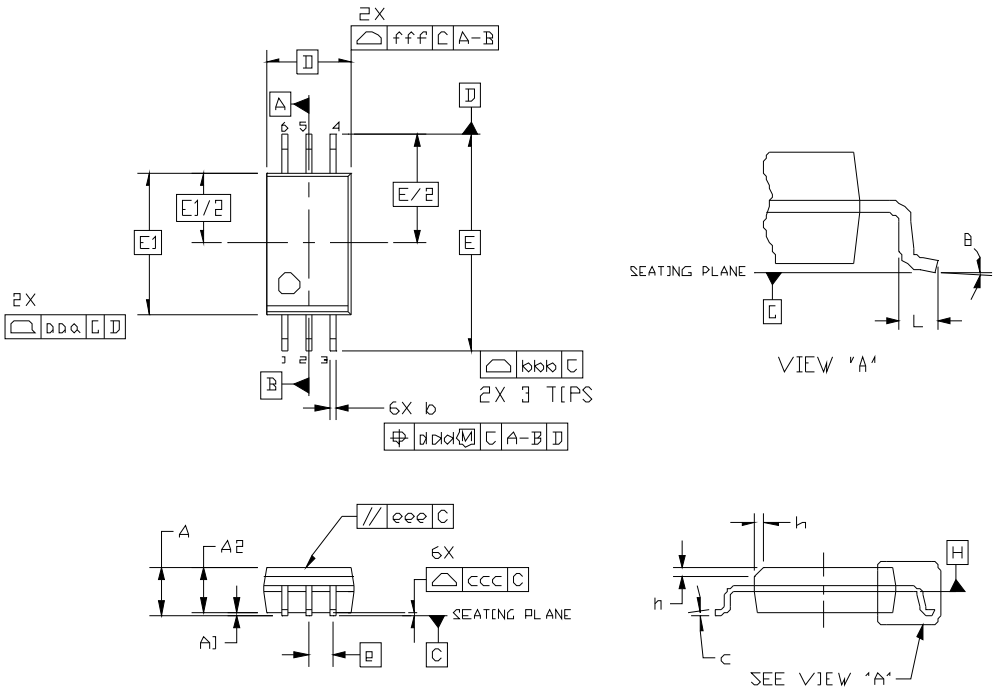

Figure 20. SDIP6 Package

Table 21. SDIP6 Package Diagram Dimensions

Dimension	Min	Max
A	—	2.65
A1	0.10	0.30
A2	2.05	—
b	0.31	0.51
c	0.20	0.33
D	4.58 BSC	
E	11.50 BSC	
E1	7.50 BSC	
e	1.27 BSC	
L	0.40	1.27
h	0.25	0.75

Notes:
1. All dimensions shown are in millimeters (mm) unless otherwise noted.
2. Dimensioning and Tolerancing per ANSI Y14.5M-1994.

Table 21. SDIP6 Package Diagram Dimensions (Continued)

Dimension	Min	Max
θ	0°	8°
aaa	—	0.10
bbb	—	0.33
ccc	—	0.10
ddd	—	0.25
eee	—	0.10
fff	—	0.20

Notes:
1. All dimensions shown are in millimeters (mm) unless otherwise noted.
2. Dimensioning and Tolerancing per ANSI Y14.5M-1994.

15. Land Pattern: SDIP6

Figure 21 illustrates the recommended land pattern details for the Si87xx in an SDIP6 package. Table 22 lists the values for the dimensions shown in the illustration.

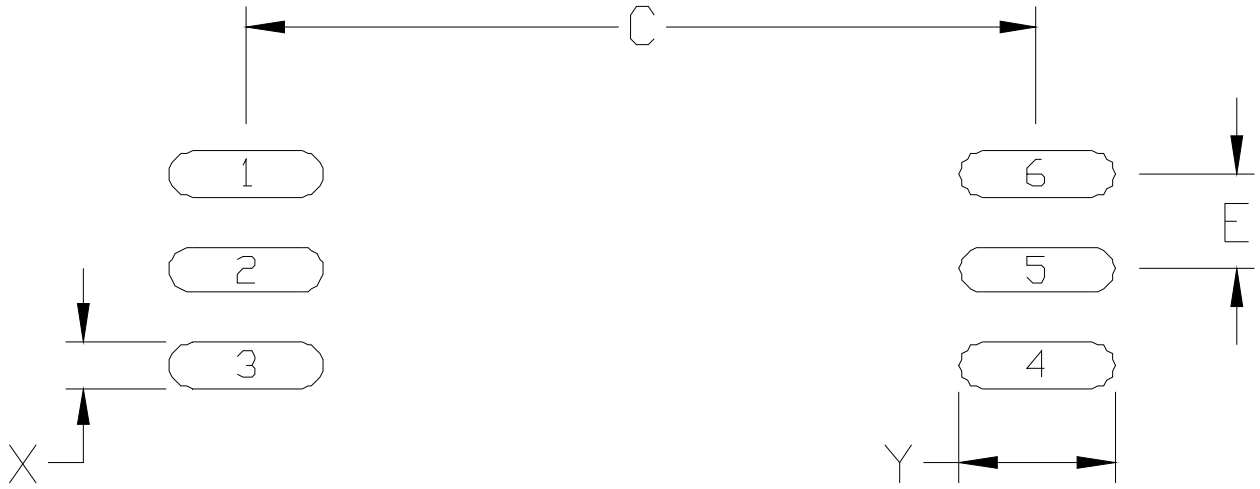

Figure 21. SDIP6 Land Pattern

Table 22. SDIP6 Land Pattern Dimensions*

Dimension	Min	Max
C	10.45	10.50
E	1.27 BSC	
X	0.55	0.60
Y	2.00	2.05
***Note:** This Land Pattern Design is based on the IPC-7351 specification.		

16. Top Markings

16.1. Top Marking (8-Pin Narrow Body SOIC)

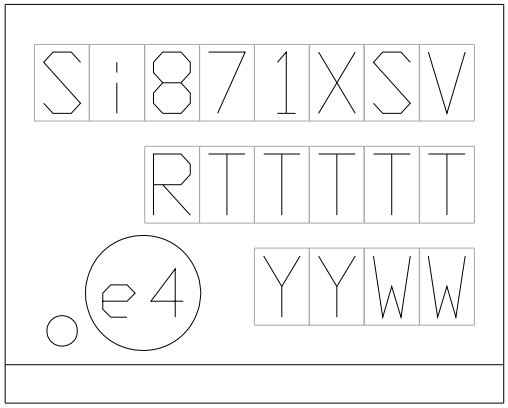

16.2. Top Marking Explanation (8-Pin Narrow Body SOIC)

Line 1 Marking:	Customer Part Number	Si871 = Isolator product series X = Output configuration 0 = open collector output only 1 = open collector output w/ internal pull-up 2 = open collector output w/ output enable S = Performance Grade: A = 15 Mbps, 20 kV/µs minimum CMTI B = 15 Mbps, 35 kV/µs minimum CMTI C = 1 Mbps, 20 kV/µs minimum CMTI V = Insulation rating C = 3.75 kV
Line 2 Marking:	RTTTTT = Mfg Code	Manufacturing Code from the Assembly Purchase Order form. “R” indicates revision.
Line 3 Marking:	Circle = 43 mils Diameter Left-Justified	“e4” Pb-Free Symbol
	YY = Year WW = Work Week	Assigned by the Assembly House. Corresponds to the year and work week of the mold date.

16.3. Top Marking (DIP8)

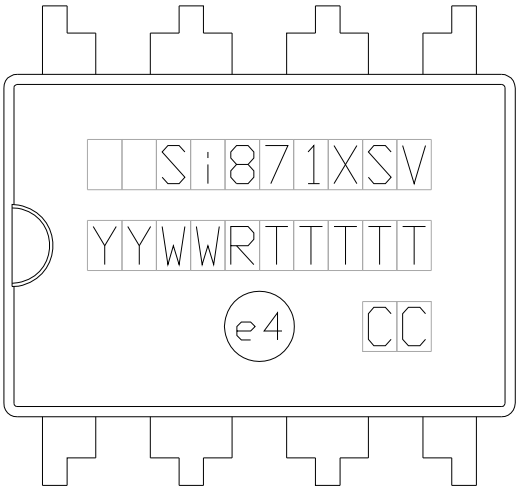

16.4. Top Marking Explanation (DIP8)

Line 1 Marking:	Customer Part Number	Si871 = Isolator product series X = Output configuration 0 = open collector output only 1 = open collector output w/ internal pull-up 2 = open collector output w/ output enable S = Performance Grade: A = 15 Mbps, 20 kV/µs minimum CMTI B = 15 Mbps, 35 kV/µs minimum CMTI C = 1 Mbps, 20 kV/µs minimum CMTI V = Insulation rating C = 3.75 kV
Line 2 Marking:	YY = Year WW = Work Week	Assigned by the Assembly House. Corresponds to the year and work week of the mold date.
	RTTTTT = Mfg Code	Manufacturing Code from the Assembly Purchase Order form. “R” indicates revision.
Line 3 Marking:	Circle = 51 mils Diameter Center-Justified	“e4” Pb-Free Symbol
	Country of Origin (Iso-Code Abbreviation)	CC

16.5. Top Marking (SDIP6)

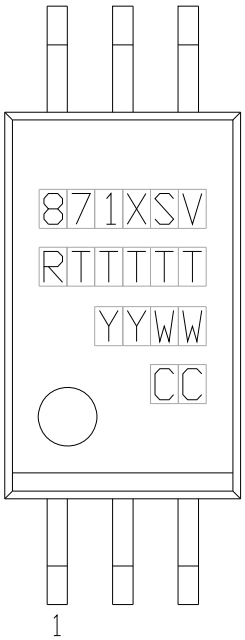

16.6. Top Marking Explanation (SDIP6)

Line 1 Marking:	Device	871 = Isolator product series X = Output configuration 0 = open collector output only 1 = open collector output w/ internal pull-up 2 = open collector output w/ output enable S = Performance Grade: A = 15 Mbps, 20 kV/µs minimum CMTI B = 15 Mbps, 35 kV/µs minimum CMTI C = 1 Mbps, 20 kV/µs minimum CMTI V = Insulation rating C = 3.75 kV; D = 5.0 kV
Line 2 Marking:	RTTTTT = Mfg Code	Manufacturing Code from the Assembly Purchase Order form. “R” indicates revision.
Line 3 Marking:	YY = Year WW = Work Week	Assigned by the Assembly House. Corresponds to the year and work week of the mold date.
Line 4 Marking:	Country of Origin (Iso-Code Abbreviation)	CC

Document Change List

Revision 0.5 to Revision 1.0

- Updated various specs in Table 2 on page 4.
- Added Figure 1 on page 6.
- Added Figure 2 on page 7.
- Added Figure 7 on page 15.
- Updated various specs in Table 9 on page 16.
- Removed “pending” throughout.
- Added references to “CQC” throughout.
- Added references to “AEC-Q100 qualified” throughout.
- Updated all Top Marking figures and descriptions.

Revision 1.0 to Revision 1.1

- Updated Figure 1 on page 6.
- Updated Ordering Guide Table 15 on page 22.
  - Removed references to moisture sensitivity levels from table note.

Revision 1.1 to Revision 1.2

- Removed references to LGA8 throughout.
- Deleted all IEC 60747-5 and IEC 61010 references throughout and added VDE 0884-10 references throughout.
- Updated all certification body’s certificate and file reference numbers throughout.

Revision 1.2 to Revision 1.3

- Updated "9.Ordering Guide" on page 22.
  - Updated Table 15.

Revision 1.3 to Revision 1.31

- Added "9.1.Automotive Grade OPNs" on page 25.

Revision 1.31 to Revision 1.32

- Updated "9.1.Automotive Grade OPNs" on page 25.

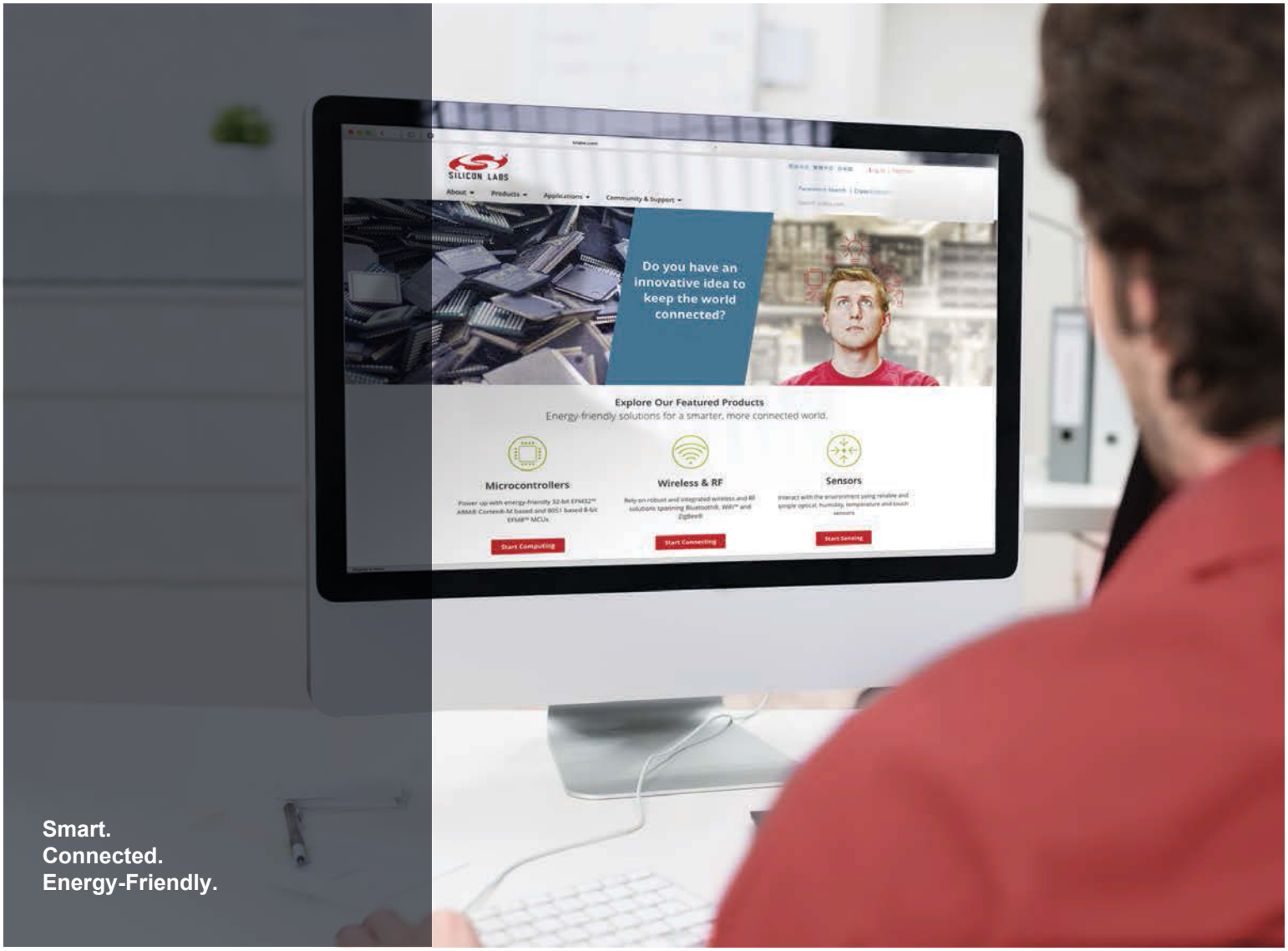

Products
www.silabs.com/products

Quality
www.silabs.com/quality

Support and Community
community.silabs.com

Disclaimer
Silicon Labs intends to provide customers with the latest, accurate, and in-depth documentation of all peripherals and modules available for system and software implementers using or intending to use the Silicon Labs products. Characterization data, available modules and peripherals, memory sizes and memory addresses refer to each specific device, and "Typical" parameters provided can and do vary in different applications. Application examples described herein are for illustrative purposes only. Silicon Labs reserves the right to make changes without further notice to the product information, specifications, and descriptions herein, and does not give warranties as to the accuracy or completeness of the included information. Without prior notification, Silicon Labs may update product firmware during the manufacturing process for security or reliability reasons. Such changes will not alter the specifications or the performance of the product. Silicon Labs shall have no liability for the consequences of use of the information supplied in this document. This document does not imply or expressly grant any license to design or fabricate any integrated circuits. The products are not designed or authorized to be used within any FDA Class III devices, applications for which FDA premarket approval is required, or Life Support Systems without the specific written consent of Silicon Labs. A "Life Support System" is any product or system intended to support or sustain life and/or health, which, if it fails, can be reasonably expected to result in significant personal injury or death. Silicon Labs products are not designed or authorized for military applications. Silicon Labs products shall under no circumstances be used in weapons of mass destruction including (but not limited to) nuclear, biological or chemical weapons, or missiles capable of delivering such weapons. Silicon Labs disclaims all express and implied warranties and shall not be responsible or liable for any injuries or damages related to use of a Silicon Labs product in such unauthorized applications.

Trademark Information
Silicon Laboratories Inc.®, Silicon Laboratories®, Silicon Labs®, SiLabs® and the Silicon Labs logo®, Bluegiga®, Bluegiga Logo®, ClockBuilder®, CMEMS®, DSPLL®, EFM®, EFM32®, EFR, Ember®, Energy Micro, Energy Micro logo and combinations thereof, "the world's most energy friendly microcontrollers", Ember®, EZLink®, EZRadio®, EZRadioPRO®, Gecko®, Gecko OS, Gecko OS Studio, ISOmodem®, Precision32®, ProSLIC®, Simplicity Studio®, SiPHY®, Telegesis, the Telegesis Logo®, USBXpress® , Zentri, the Zentri logo and Zentri DMS, Z-Wave®, and others are trademarks or registered trademarks of Silicon Labs. ARM, CORTEX, Cortex-M3 and THUMB are trademarks or registered trademarks of ARM Holdings. Keil is a registered trademark of ARM Limited. Wi-Fi is a registered trademark of the Wi-Fi Alliance. All other products or brand names mentioned herein are trademarks of their respective holders.

Silicon Laboratories Inc.
400 West Cesar Chavez
Austin, TX 78701
USA

http://www.silabs.com