KYCON, Inc. 1810 Little Orchard Street, San Jose, CA 95125 (408)494-0330

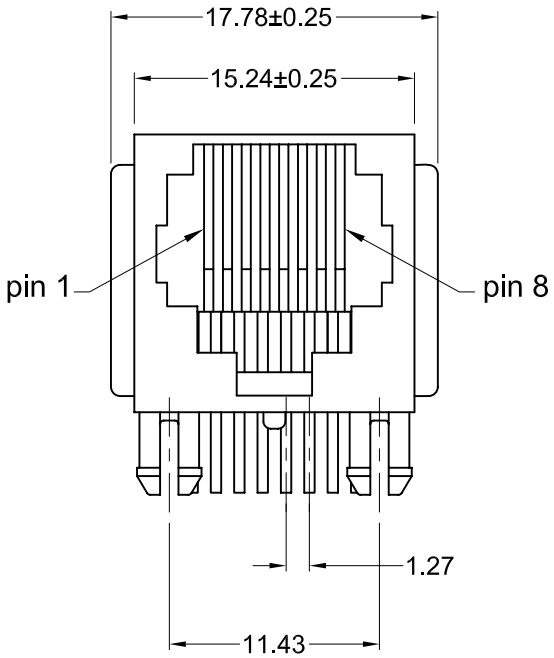

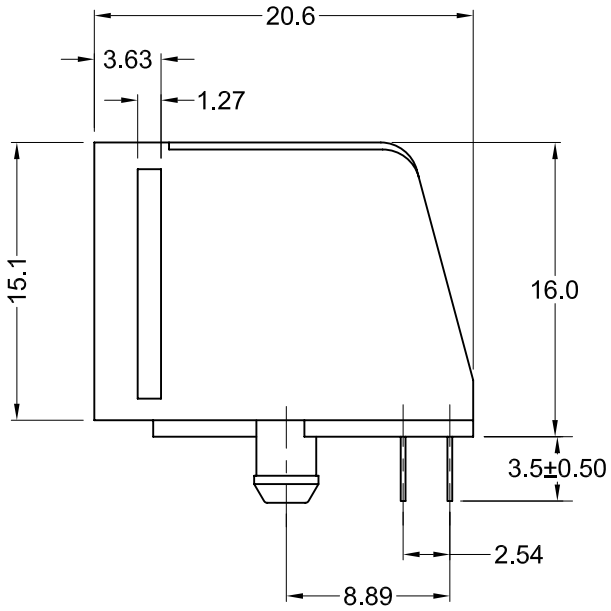

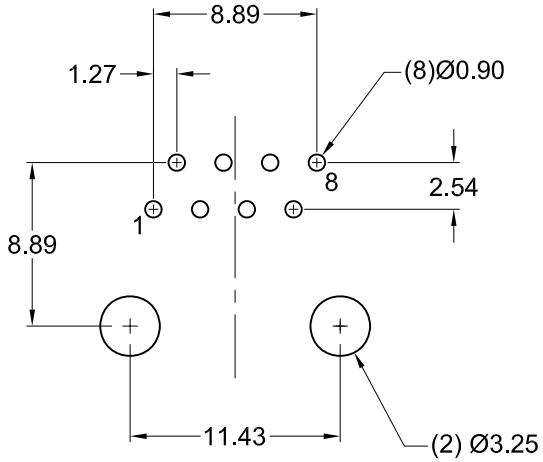

Recommended PCB Layout
(Top View)

Materials and Finish

Housing Material-
PBT Thermoplastic
UL 94V-0 Rated
Color: Black

Design meets UL 1863 Sec. 8
Electrical Probe and Sec. 20
Child Finger test requirements

Contact Material-
Phosphor Bronze

Contact Plating Options-
Standard: 0.0001" Nickel Underplating, Selectively Plated 0.000015" Gold on Contact Area, Tin Plated on Termination End

-50 Option: 0.0001" Nickel Underplating, Selectively Plated 0.000050" Gold on Contact Area to Comply with FCC Requirements Under No. 47 C.F.R. Part 68, Subpart F, Tin Plated on Termination End

Electrical Characteristics

Current Rating-
1.5 Amps

Voltage Rating-
125V DC

Insulation Resistance-
500 Megohms Min.

Dielectric Withstanding Voltage-
1000V rms, 60Hz

Contact Resistance-
20 milliohms Max.

Operating Temperature-
-40°C to +85°C

Part Number	Contact Area Plating Finish
GDX-A-88	15u" Gold (standard)
GDX-A-88-50	50u" Gold (-50 option)

RoHS COMPLIANT
EU Directive 2002/95/EC

E134345

LR78160

Tolerances
X.X ± 0.25
X.XX ± 0.15
Unless Stated Otherwise

REV.	DATE	DESCRIPTION	REV. BY	CHK. BY
A1	7/14/05	New Drawing	R. Aguirre	H. MA
A2	05/13/10	ECO #10-025	S. Vien	H. MA
A3	07/25/11	ECO #11-048	S. Vien	H. MA

DRAWN BY	DATE
R. Aguirre	05/11/05
	UNITS
	mm

GDX-A-88-xx

Right Angle PCB Mount, RoHS Compliant

Modular Jack, 8 positions, 8 contacts

KYCON