REV.	ECN NO.	DATE	SIGN	DESCRIPTION
B	LEN14B0097	2014/11/04	Vicky	Update Logo

ALTW
CONFIDENTIAL
2014-11-04
R&D DEPT.

ALTW
DCC. DEPT.
CONFIDENTIAL
2014.11.11
ISSUED

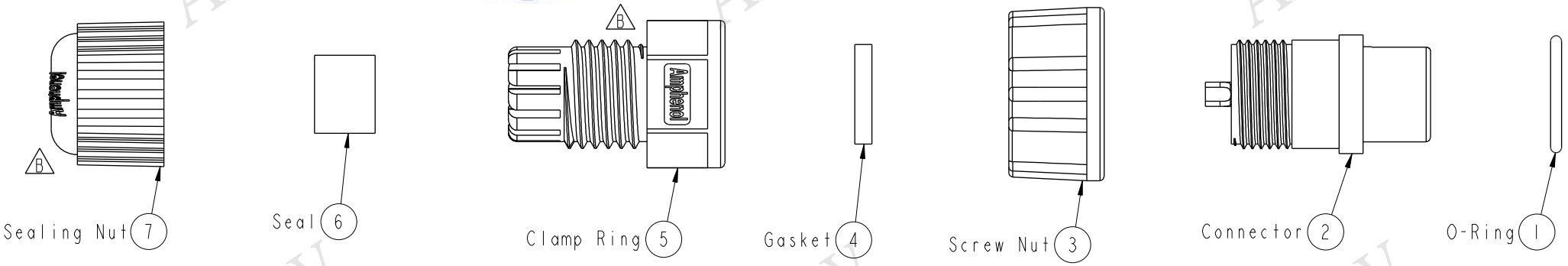

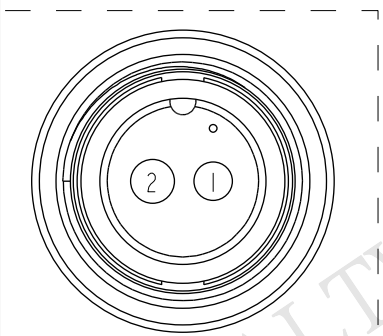

Pin Assignments
Front View

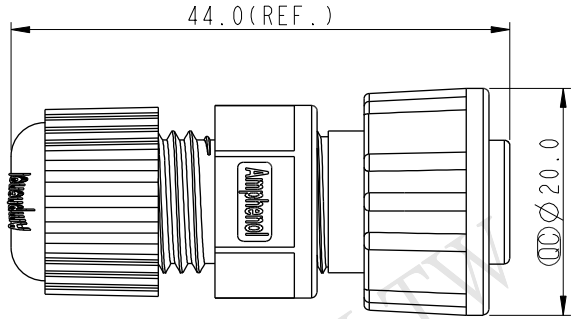

Note:
* QC Important Dimension To Check.
* Waterproof Rate: IP67
* Housing: Nylon+GF, Black
* Female Pin: Copper Alloy, Gold Plated
* O-Ring: EPDM, Black
* Screw Nut: Nylon+GF, Black
* Gasket: EPDM, Black
* Clamp Ring: Nylon, Black
* Seal: EPDM, Black
* Sealing Nut: Nylon, Black
* Seal For Cable OD: ∅4.5mm~∅6.5mm
  (防水墊圈線徑:∅4.5mm~∅6.5mm)
* One Set Unassembled In One PE Bag
  (每一組未組裝,放置於一個PE袋,並封口)

UNIT:mm

TOLERANCE
.X ±0.25
.XX ±0.1
.XXX ±0.05
ANGLES ±1°

TITLE	Standard Assy Screw 2Pin F Conn F Pin		
SCALE 3:2	SIZE A4	SHEET 1 OF 1	
REV. B	WC-REV. A.4	QC: Inspection item	

Amphenol LTW
安費諾亮泰企業股份有限公司

ITEM NO BB-02BFFA-SL7001	DRAWN BY Vicky	DATE 2014-11-04
DWG NO BB-02BFFA-SL7001	CHECKED BY Sam	DATE 2014-11-04
CUSTOMER ALTW	APPROVED BY Rita	DATE 2014-11-04

FMW10702-01-02A1

THIS DOCUMENT IS SUBJECT TO CHANGE WITHOUT NOTICE. IT IS CONFIDENTIAL AND A PROPERTY OF Amphenol LTW. DISCLOSURE TO THIRD PARTY HAS TO BE AUTHORIZED BY Amphenol LTW.